PROJECT MANUAL

Volume 2 of 3
New Elementary School Construction Project
Specification 02200
Storm Water Pollution Prevention Plan

ROOSEVELT II (HENRY) ELEMENTARY SCHOOL
NEW ELEMENTARY SCHOOL CONSTRUCTION PROJECT
(BID NO. F09-02 RE-BID)

1250 West 14th Street, San Bernardino, CA 92411

BID ISSUANCE SET

OWNER
SAN BERNARDINO CITY UNIFIED SCHOOL DISTRICT
777 North F Street, San Bernardino, CA 92410

ARCHITECT
PSWC GROUP
1887 Business Center Drive, Suite 3, San Bernardino, CA 92408

CONSTRUCTION MANAGER
VANIR CONSTRUCTION MANAGEMENT, INC.
290 North D Street, Suite 900, San Bernardino, CA 92401
(909) 384-1785

RE-BID #F09-02 ROOSEVELT II (HENRY) E.S.

NEW CONSTRUCTION BID ISSUANCE SET 12/09/11

SECTION 00007

SEALS

DSA APPLICATION NO. 4-107199 **DSA FILE NO.** 36-55

ARCHITECT:

PSWC Group
1887 Business Center Drive, Suite 3
San Bernardino, CA 92408

LICENSED ARCHITECT
JAMES MICHAEL STINSON
C-19098
REN. 2/28/09
STATE OF CALIFORNIA

BY: _____
JAMES M. STINSON

STRUCTURAL ENGINEER:

THOMPSON & ASSOCIATES
2122 Walnut Street
Pasadena, CA 91107

REGISTERED PROFESSIONAL ENGINEER
JAMES H. THOMPSON
No. 1369
STRUCTURAL
STATE OF CALIFORNIA
License fee due 3-31-2009

BY: _____
JAMES THOMPSON

MECHANICAL ENGINEER:

SOUTH COAST ENGINEERING GROUP
5000 N. Parkway Calabasas Road, Suite 307
Calabasas, CA 91302

REGISTERED PROFESSIONAL ENGINEER
PETER A. KRAUT
No. M-31498
EXP. 12-31-08
MECHANICAL
STATE OF CALIFORNIA

BY: _____
PETER A. KRAUT

IDENTIFICATION STAMP
DIV. OF THE STATE ARCHITECT
OFFICE OF REGULATION SERVICES
04 107199
AC MF FLS NUTAN PATEL SS
DATE DEC 21 2007

ACS: M. Fennell
FLS: NUTAN PATEL 12/17/07

Bid Issuance Set

ELECTRICAL ENGINEER:

FBA ENGINEERING

3420 Irvine Avenue, Suite 200

Newport Beach, CA 92660

REGISTERED PROFESSIONAL ENGINEER
STEPHEN R. ZAJICEK
E 10372
EXP 09/30/08
ELECTRICAL
STATE OF CALIFORNIA

BY: _____

STEPHEN ZAJICEK

CIVIL ENGINEER:

FRACO ENTERPRISES

12139 Mount Vernon Avenue, Suite 210

Grand Terrace, CA 92313

REGISTERED PROFESSIONAL ENGINEER
MARIA I. FRASER
No. C 050[illegible]
EXP [illegible]-12-08
CIVIL
STATE OF CALIFORNIA

BY: _____

MARIA FRASER

DSA APPROVAL:

IDENTIFICATION STAMP
DIV. OF THE STATE ARCHITECT
OFFICE OF REGULATION SERVICES

04 107199

AC MF FLS SS

DATE DEC 21 2007

Bid Issuance Set

TABLE OF CONTENTS

SECTION	DESCRIPTION
	VOLUME 1 OF 3
DIVISION 0	**BIDDING AND CONTRACT REQUIREMENTS**
	BIDDING REQUIREMENTS
00007	Seals Page
00010	Notice Inviting Bids
00011	Table of Contents
00020	Information for Bidders
	BID FORMS
00030	Bid Cover Sheet
00100	Bid Form
00110	Bidder's Noncollusion Affidavit (Attachment No. 1 to Bid Form)
00120	Site Visit Certification (Attachement No. 2 to Bid Form)
00130	Certification of Compliance with DVBE Policy (Attachment No. 3 to Bid Form)
00140	Proposed Subcontractors (Attachment No. 4 to Bid Form)
00150	Bid Bond (Attachment No. 5 to Bid Form)
00160	Bidder References and Responsibility Information (Attachment No. 6 to Bid Form)
00170	Supplemental Bid Information (Attachment No. 7 to Bid Form)
00180	Supplemental Bid Information Alternates (Attachment No. 7 to Bid Form)
	CONTRACT FORMS
00200	Agreement Between District and Contractor
00210	Certificate Regarding Workers' Compensation (Attachment No. 1 to Agreement)
00220	Drug-Free Workplace Certification (Attachment No. 2 to Agreement)
00230	Statement of Intent to Meet DVBE Participation Goal (Attachment No. 3 to Agreement)
00240	Faithful Performance Bond Form (Attachment No. 4 to Agreement)
00250	Payment Bond Form (Attachment No. 5 to Agreement)
00260	Vendor Tax Information (Attachment No. 6 to Agreement)
00270	Certification of Non-Utilization of Asbestos Material (Attachment No. 7 to Agreement)
00280	Prime/General Contractor Information (Attachment No. 8 to Agreement)
00290	Contractor Prevailing Wage Compliance Certification (Attachment No. 9 to Agreement)
00300	Guarantee (Attachment No. 10 to Agreement)
00310	Criminal Records Checks Certification Forms (Attachment No. 11 to Agreement)
00700	General Conditions (Includes Table of Contents)
00800	Supplementary General Conditions
00810	Special Conditions
DIVISION 1	**GENERAL REQUIREMENTS**
01010	Summary of Work
01015	Contractors Use of the Premises
01105	Phasing of the Work
01210	Allowances
01230	Alternates
01250	Substitution Procedures
01305	Regulatory Requirements
01310	Project Coordination and Meetings
01312	Construction Indoor Air Quality
01314	Labor Compliance Program (LCP) Coordination
01322	Construction Project Schedule
01330	Submittal Procedures

REFERENCE VOLUME 1 OF 3

SECTION	DESCRIPTION
01340	Construction Demolition Waste Management
01356	Alteration Project Procedures
01357	Contractor Safety Requirements
01450	Quality Control
01453	Expansion Anchors and Powder Actuated Fasteners
01455	Testing and Inspection
01500	Temporary Facilities and Controls
01585	Project Signs
01600	Material and Equipment
01620	Storage and Protection
01710	Cleaning
01712	Field Engineering
01739	Cutting and Patching
01770	Closeout Procedures
01786	Warranties (Guarantees) and Bonds
01789	Project Record Documents
01790	Fire Safety

REF. VOLUME 1 OF 3

VOLUME 2 OF 3

2 OF 3

02200	Storm Water Pollution Prevention Plan (SWPPP)

VOLUME 3 OF 3

REFERENCE VOLUME 3 OF 3

DIVISION 2	SITE WORK
02230	Site Clearing
02310	Grading
02315	Excavation
02316	Filling and Backfilling
02317	Trenching for Site Utilities
02361	Soil Treatment for Termite Control
02510	Water Distribution
02511	Fire Protection Water Line
02515	Disinfection of Water Distribution System
02535	Sanitary Sewer Piping
02551	Site Gas Distribution
02635	Storm Drainage Piping
02741	Bituminous Concrete Paving
02751	Portland Cement Concrete Paving
02765	Pavement Markings
02792	Playground Surfacing – Locking Rubber Tiles
02821	Chain Link Fences and Gates
02843	Parking Bumpers
02881	Playground Equipment
02910	Landscaping
02915	Irrigation Systems

DIVISION 3	CONCRETE
03100	Concrete Forms and Accessories
03200	Concrete Reinforcement
03300	Cast-in-Place Concrete

DIVISION 4	MASONRY
04810	Unit Masonry Assemblies

SECTION	DESCRIPTION
DIVISION 5	**METALS**
05120	Structural Steel
05500	Metal Fabrications
05520	Handrails and Railings
05810	Expansion Joint Cover Assemblies
DIVISION 6	**WOOD, PLASTIC, AND COMPOSITES**
06100	Rough Carpentry
06181	Glued-Laminated Structural Units
06200	Finish Carpentry
06410	Custom Cabinets
06605	Fiberglass Reinforced Plastic Panels
DIVISION 7	**THERMAL AND MOISTURE PROTECTION**
07130	Sheet Waterproofing
07140	Fluid-Applied Waterproofing
07190	Water Repellents
07212	Batt Insulation
07311	Asphalt Shingles
07510	Built-Up Bituminous Roofing
07620	Sheet Metal Flashing and Trim
07720	Roof Hatches
07840	Firestopping
07900	Joint Sealers
DIVISION 8	**DOORS AND WINDOWS**
08110	Hollow Metal Doors/ Frames
08210	Wood Doors
08310	Access Doors and Panels
08330	Counter Coiling Doors
08625	Tubular Skylights
08710	Finish Hardware
08800	Glass and Glazing
DIVISION 9	**FINISHES**
09206	Metal Lath
09220	Portland Cement Plaster
09260	Gypsum Board Assemblies
09300	Ceramic Tile
09302	Quarrry Tile
09505	Acoustical Tile Ceilings
09511	Suspended Acoustical Panel Ceilings
09650	Resilient Flooring
09681.2	6 Foot Roll Goods Vinyl Backed Carpet
09681.3	Vinyl Backed Walk-Off Mat
09720	Wall Covering
09900	Paints and Coatings
09965	Anti-Graffiti Coating
	SPECIALTIES
10105	Markerboards and Tackboards
10121	Tackable Wall Systems
10170	Plastic Toilet Compartments

REFERENCE VOLUME 3 OF 3

SECTION	DESCRIPTION
10350	Flagpoles
10400	Identification Devices
10405	Detectable Warning Systems
10420	Cast Bronze Plaques
10426	Signage and Graphics
10500	Lockers
10523	Fire Extinguishers, Cabinets, and Accessories
10651	Operable Panel Partitions
10810	Toilet Accessories
DIVISION 11	**EQUIPMENT**
11400	Food Service Equipment
11401	Custom Fabricated Food Service Equipment
11405	Food Service Equipment - Walk-in
11425	Hood and Ventilation Equipment
11450	Appliance Equipment
DIVISION 12	**FURNISHINGS**
12492	Horizontal Louver Blinds
12494	Curtain and Track - Cubicle
12495	Curtain and Track
DIVISION 13	**SPECIAL CONSTRUCTION**
13915	Fire-Suppression System
DIVISION 14	**CONVEYING SYSTEM**
	NOT USED
DIVISION 15	**MECHANICAL**
15050	Basic Mechanical Materials and Methods
15060	Hangers and Supports
15075	Mechanical Identification
15080	Mechanical Insulation
15085	Plumbing Insulation
15110	Valves
15122	Meters and Gages
15140	Domestic Water Piping
15150	Sanitary Waste and Vent Piping
15160	Storm Drainage Piping
15194	Fuel Gas Piping
15410	Plumbing Fixtures
15430	Plumbing Specialties
15732	Rooftop Air Conditioners
15815	Metal Ducts
15820	Duct Accessories
15834	Air Curtains
15838	Power Ventilators
15855	Diffusers, Registers, and Grilles
15900	Building Management System
15950	Testing, Adjusting, and Balancing

REFERENCE VOLUME 3 OF 3

SECTION	DESCRIPTION
DIVISION 16	**ELECTRICAL**
16010	Electrical General Provisions
16050	Basic Electrical Materials and Methods
16111	Conduit and Wire
16114	Cable Tray
16160	Panelboards and Terminal Cabinets
16250	Automatic Transfer Switch
16425	Switchboards
16480	Motor Control Equipment
16500	Lighting Fixtures
16620	Standby Power
16720	Integrated Fire Alarm / Security System
16745	Telephone System
16760	Integrated Communication System
16761	Clock System
16762	Data System
16771	Autonomous Public Address Systems
16931	Occupancy Motion Sensors

END OF SECTION

List of Exhibits

Geotechnical Investigation Report, dated March 5, 2007, by Converse Consultants

Water Service Atlas Maps

Mitigation Monitoring Report Program (CEQA Negative Declaration Requirements)

Southern California Edison Electrical Service Plan

SECTION 02200

STORM WATER POLLUTION PREVENTION PLAN

PART 1 - GENERAL

1.01 SECTION INCLUDES

A. Work in this section includes all labor, equipment and materials necessary for the implementation, maintenance and monitoring of the STORM WATER POLLUTION PREVENTION PLAN (S.W.P.P.P.).
   1. Principal Items of Work Included Herein:
      a. Plan administration, maintenance and updates.
      b. Placement of Erosion/Pollution control devices.
      c. Maintenance and monitoring of control devices.
      d. Non-Storm Water Management.
      e. Miscellaneous related work necessary for plan compliance.
      f. Reports and Certificates.

1.02 RELATED SECTIONS

A. All other sections of this specification shall comply with the requirements of this section. All trades working on the project need to be aware of and in compliance with the S.W.P.P.P.

B. All materials that can potentially enter and/or pollute storm water discharges and the generation of non-storm water discharges shall be in compliance with the S.W.P.P.P. Representative materials and procedures include erosion control of native and fill materials, construction vehicle and equipment fueling, washout and leakage, building and soil treatment chemicals and solvents, paving and landscape improvements, general construction debris, trash and any other material that can potentially enter storm drain system or natural flow course.

1.03 REGULATORY REQUIREMENTS

A. Prior to the beginning of construction on this site, the School District will be filing with the State of California, State Water Resources Control Board a Notice of Intent (N.O.I.) that this project will comply with the terms of the State Water Resources Control Board's National Pollutant Discharge Elimination System (NPDES) General Permit No. CA5000002, Waste Discharge Requirements (WDRS) for discharges of storm water run-off associated with construction activity. With the filing of the N.O.I. the contractor will be obligated to comply with the requirements of the State's General Permit with the implementation and maintenance of the S.W.P.P.P.

1.04 QUALITY ASSURANCE

A. Pre-construction Conference: Contractor, all subcontractors and all heavy equipment operators shall attend the pre-construction conference, at which time the working copies of the S.W.P.P.P. will be presented to the Contractor and the S.W.P.P.P. requirements will be reviewed.

B. Contractor's Project Manager, Project Engineer and Construction Superintendent shall become familiar with all aspects of the S.W.P.P.P. (including the State's General Permit) and shall be responsible for ensuring compliance with the S.W.P.P.P. for the project.

C. Contractor shall educate, direct and enforce compliance with the requirements of the S.W.P.P.P. by all subcontractors.

1.05 PERFORMANCE REQUIREMENTS

A. The Storm Water Pollution Prevention Plan is a minimum requirement that Contractor and all subcontractors shall abide by. Revisions and modifications to the S.W.P.P.P. are acceptable only if they maintain levels of protection equal to or greater than originally specified.

B. Contractor and all subcontractors shall read and be thoroughly familiar with all of the requirements of the S.W.P.P.P. Contractor shall be responsible for the performance of subcontractors. Contractor shall inspect and monitor all subcontractors work and storage areas for compliance with the S.W.P.P.P. prior to any anticipated rain.

C. Penalties: Contractor shall pay any fines and be liable for any other penalties that may be imposed by the regulatory agency for non-compliance with the S.W.P.P.P. during the course of work. In cases of violations, Contractor shall be responsible to complete any and all corrective measures, at his own expense, as may be directed by the regulatory agency.

PART 2 - PRODUCTS

2.01 MATERIAL

A. Provide all temporary and permanent storm water pollution prevention facilities, equipment and materials as required by or as necessary to comply with the S.W.P.P.P.

PART 3 - EXECUTION

3.01 IMPLEMENTATION

A. All measures required by the S.W.P.P.P. shall be implemented concurrent with the commencement of construction. Pollution prevention practices and devices shall be followed or installed as early in the construction schedule as possible with frequent upgrading of devices as construction progresses.

B. Contractor shall conduct an inspection of all erosion control and pollution prevention devices prior to any anticipated storm event to verify all S.W.P.P.P. measures are in place and to identify and mitigate any new potential pollution sources brought about by the ongoing construction.

C. After storm events the Contractor shall conduct an inspection of the project site to verify the performance of the erosion control and pollution prevention devices in reducing pollutant loadings of the discharged storm water associated with the construction activity.

D. Contractor and all subcontractors will be required to eliminate or reduce to the extent feasible the discharge of materials other than storm water to the storm drain system and/or receiving waters as dictated by the State General Permit and S.W.P.P.P.

3.02 REPORTING

A. Contractor shall prepare all inspection records for each inspection done prior to and just after all storm events as required by the S.W.P.P.P. with two copies forwarded to District.

B. Contractor shall prepare the overall certification based upon the inspection reports for Districts use in certifying the project site's compliance with the S.W.P.P.P. and the State's General Permit.

3.03 COMPLETION OF WORK

A. Clean-up shall be performed as each portion of the work progresses. All refuse, excess material and possible pollutants shall be disposed of in a legal manner off-site and all temporary and permanent S.W.P.P.P. devices shall be in place and maintained in good condition.
   1. At completion of work, Contractor and District shall inspect the installed S.W.P.P.P. devices and Contractor shall present the currently implemented S.W.P.P.P. with all backup records to the District.

END OF SECTION (SWPPP Attached)

Storm Water Pollution Prevention Plan (SWPPP)

Risk Level 1

August 1, 2011

Waste Discharge Identification Number: 836C358225

For

Dr. Mildred Henry Elementary School

DSA 03-107199

Legally Responsible Person (LRP)

San Bernardino City Unified School District
956 West 9th street
San Bernardfino CA, 92411
(909) 388-6100
Contact: Jorge Mendez

Qualified SWPP Practicioner (QSP)

Name:_____

Adress:_____

Phone No._____

Contact:_____

Qualified SWPPP Develper (QSD)

Fraco Enterprises Inc
12139 Mount Vernon Avenue Suite 210
Grand Terrace California
Contact : Maria I Fraser, P.E., Certified QSD #00454

Start Costruction: December 2011
End Construction: January 2013

TABLE OF CONTENTS

Page

SWPPP Certification By Certified SWPPP Developer (QSD)

SECTION 1 SWPPP Requirements

1.1 Introduction

1.2 Permit Registration Documents

1.3 SWPPP Availability and Implementation

1.4 SWPPP Amendments

1.5 Retention of Records

1.6 Required Non-Compliance Reporting

1.7 Annual Report

1.8 Changes to Permit Coverage

1.9 Notice of Termination

SECTION 2 Project Information

2.1 Project and Site Description

2.2 Stormwater Run-On From Offsite Areas

2.3 Findings of the Construction Site Sediment and Receiving Water Risk Determination

2.4 Construction Schedule

2.5 Potential Construction Site Pollutant Sources

2.6 Identification of Non-Stormwater Discharges

SECTION 3 Best Management Practices

3.1 Schedule for BMP Implementation

3.2 Erosion Control and Sediment Control

3.3. Non-Stormwater and Material Management

3.4 Post-Construction Stormwater Management Measures

SECTION 4 BMP Inspection, Maintenance, and Rain Event Action Plans

4.1 BMP Inspection and Maintenance

4.2 Rain Event Action Plans

SECTION 5 Training

SECTION 6 Responsible Parties and Operators

6.1 Responsible Parties

6.2 Contractor List

SECTION 7 Construction Site Monitoring Program

7.1 Purpose

7.2 Applicability of Permit Requirements

7.3 Monitoring Locations

7.4 Safety

7.5 Visual Monitoring (Inspections)

7.6 Water Quality Sampling and Analysis

7.7 Watershed Monitoring Option

7.8 Quality Assurance and Quality Control

7.9 Reporting Requirements and Records Retention

LIST OF APPENDICES

Appendix A	Construction General Pemit
Appendix B	Submitted Registration Documents Notice of Intent (NOI), Risk Assesment, Site Map. WDID Confirmation, Annual Fee, Signed Cerification Statement and Annual Report
Appendix C	SWPPP Amendment Log
Appendix D	Submitted Changes to Permit Registratgion Documents (PDRs) , (due to change of ownership or acreage)
Appendix E	Construction Schedule
Appendix F	Construction Activites, Materials uses, and Associated Pollutants
Appendix G	CASQA BMP Handbook Fact Sheets
Appendix H	Constrution Site Inspection Report
Appendix I	Training Reporting Form
Appendix J	Responsible Parties
Appendix K	Contractor's and Subcontractors
Appendix L	Construction Site Manager

Qualified SWPPP Developer

Approval and Certification of the Stormwater Pollution Prevention Plan

Project Name: Dr. Mildred Henry Elementary School , DSA 03-107199

Project Number ID: **836C358225**

"This Stormwater Pollution Prevention Plan and Attachments were prepared under my direction to meet the requirements of the California Construction General Permit (SWRCB Orders No. 2009-009-DWQ as amended by Order 2010-0014-DWQ). I certify that I am a Qualified SWPPP Developer in good standing as of the date signed below."

QSD Signature

August 15, 2011
Date

Maria I Fraser, P.E.

QSD/QSP No. 00454
QSD Certificate Number

CEO. Fraco Enterprises Inc
Title and Affiliation

(909) 824- 7230
Telephone Number

Mariaf@fracoen.com
Email

Legally Responsible Person

Approval and Certification of the Stormwater Pollution Prevention Plan

Project Name: Dr. Mildred Henry Elementary School , DSA 03-107199

Project Number ID **836C358225**

"I certify under penalty of law that this document and all Attachments were prepared under my direction or supervision in accordance with a system designed to assure that qualified personnel properly gather and evaluate the information submitted. Based on my inquiry of the person or persons who manage the system or those persons directly responsible for gathering the information, to the best of my knowledge and belief, the information submitted is, true, accurate, and complete. I am aware that there are significant penalties for submitting false information, including the possibility of fine and imprisonment for knowing violations."

San Bernardino City Unified School District
Legally Responsible Person

Signature of [Authorized Representative of] Legally Responsible Person or Approved Signatory

8/29/11
Date

Jorge Mendez
Name of [Authorized Representative of] Legally Responsible Person or Approved Signatory

(909) 388- 6100
Telephone Number

Amendment Log

Project Name: Dr. Mildred Henry Elementary School , DSA 03-107199

Project Number ID **836C358225**

Amendment No.	Date	Brief Description of Amendment, include section and page number	Prepared and Approved By
			Name: QSD#
			Name: QSD#
			Name: QSD#
			Name: QSD#
			Name: QSD#
			Name: QSD#
			Name: QSD#
			Name: QSD#
			Name: QSD#

SECTION 1 SWPPP Requirements

1.1 Introduction

This Project is located in the City of San Bernardino. This project is bounded by 16th Street to the north, 14th Avenue to the south, Mount Vernon Avenue to the west, and the existing Roosevelt Elementary school and residential properties to the east The project is located Dr. Mildred Elemtary School (RII) will be an expansion to the existing Roosevelt Elementary school, which is located in the city of San Bernardino. The proposed improvements for the expansion will encompase the adjacent property to the west. Currently said propery is comprised of single-family residential type of development, which extends approximately 13.45 acres in size. . The project area flows in the southeasterly direction to the adjacent street, 14th Street. There are no existing onsite or offsite (MS4) storm drain systems.

The contractors activities will disturb the entire site area and its erosion potenial is null. This site itself does not have a history of known pollutants. However asbestos and lead based paint have been encountered during subsequent enviromental studies which will be addressed by contractor at time of demolition. Therefore all of the proper and applicalble removals for these materials shall be followed as per recommendations on enviromental documents (a separate document).

This SWPPP has been prepared to comply with the California's General Permit for *Storm Water Discharges Associated with Construction and Land Disturbance Activities* (General Permit), include the State Water Resources Control Board (SWRCB) Order No. 2009-0009-DWQ for the General Permit. A copy of the General Permit in SWPPP Appendix A, along with Attachment D-Risk Level 1 requirements

This SWPPP has been designed to address the following objectives:

1. All pollutants and their sources, including sources of sediment associated with construction, construction site erosion and all other activities associated with construction activity are controlled;
2. Where not otherwise required to be under a Regional Water Quality Control Board (RWQCB) permit, all non-stormwater discharges are identified and either eliminated, controlled, or treated;
3. Site BMPs are effective and result in the reduction or elimination of pollutants in stormwater discharges and authorized non-stormwater discharges from construction activity to the Best Available Technology/Best Control Technology (BAT/BCT) standard;
4. Calculations and design details as well as BMP controls for site run-on are complete and correct, and
5. Stabilization BMPs installed to reduce or eliminate pollutants after construction are completed."

6. Identify post-construction BMPs, which are those measures to be installed during construction that are intended to reduce or eliminate pollutants after construction is completed (post-construction BMPs are required for all sites by Section XIII.B). Note that post-construction BMPs should be developed early in the project planning/design process and reports or drawings related to permanent BMP design should be referenced as needed.

1.2 Permit Registration Documents

State when the Permit Registration Documents (PRDs) were submitted and uploaded to the SMARTS system on July 2010'. At that time the documents were "grand fathered" in. However, the project has not been built and its construction wills not commence until after the September 2, 2011 deadline, thence the preparation of this new SWPPP which meets the new guidelines. The Waste Discharge Identification confirmation can be found on the SWPPP Appendix B. This Appendix includes a copy of the Notice of intent, Risk Level Assessment (Construction Site Sediment and Receiving Water Risk Determination), Site Map, WDID confirmation, and Signed Certification Statement.

1.3 SWPPP Availability and Implementation

The SWPPP be available at the construction site during working hours while construction is occurring and shall be made available upon request by a State or Municipal inspector. When the original SWPPP is retained by a crewmember in a construction vehicle and is not currently at the construction site, current copies of the BMPs and map/drawing will be left with the field crew and the original SWPPP shall be made available via a request by radio/telephone. The SWPPP will be implemented concurrently with the start of ground disturbing activities.

1.4 SWPPP Amendments

As required by the General Permit this SWPPP will be amended or revised by a QSD and it will include a listing of the date of initial preparation and the date of each amendment. :

The following items shall also be included in each amendment:

- Who requested the amendment;
- The location of proposed change;
- The reason for change;
- The original BMP proposed, if any; and
- The new BMP proposed.

Amendments will be signed by a QSD. All amendments will be dated, directly attached to the SWPPP, and logged in the front of the SWPPP. Notation should be made over the original inscription to notify the reader that there is an amendment page to be analyzed for proper superseding information, narration, direction, and/or plan. The SWPPP field copy shall be updated, applicable sheets replaced and/or include hand annotation of the change made to the text. Retain a copy of SWPPP Amendment certification in ***Appendix D.***

The following changes have been designated by the QSD as "to be field determined" and constitute minor changes that the QSP may implement based on field conditions.

List of Changes to be Field Determined

Candidate changes for field location or determination by QSP[1]	Check changes that can be field located or field determined by QSP
Increase quantity of an Erosion or Sediment Control Measure	
Relocate/Add stockpiles or stored materials	
Relocate or add toilets	
Relocate vehicle storage and/or fueling locations	
Relocate areas for waste storage	
Relocate water storage and/or water transfer location	
Changes to access points (entrance/exits)	
Change type of Erosion or Sediment Control Measure	
Changes to location of erosion or sediment control	
Minor changes to schedule or phases	
Changes in construction materials	
(1) Any field changes not identified for field location or field determination by QSP must be approved by QSD	

1.5 Retention of Records

The General Permit *(Sections I.J.69 and IV.G)* requires that all dischargers maintain a paper or electronic copy of all required records for three years from the date generated or date submitted, whichever is last. These records shall be available at the construction site until construction is completed.

The discharger shall furnish the RWQCB, SWRCB, or US Environmental Protection Agency (EPA), within a reasonable time, any requested information to determine compliance with this General Permit. State in the SWPPP where documents will be kept and how this requirement will be met. Requests by the Regional Water Board for retention of records for a period longer than three years shall be adhered to.

1.6 Required Non-Compliance Reporting

The Permit stipulates that it is the responsibility of the permittee to properly document reportable discharges or other violations of the General Permit. Exceedances and violations should be reporting using the SMARTS system.

Because this is Level 1 project only visual monitoring will be required. NAL and NEL monitoring and reporting will not be required.

If a discharge violation occurs the QSP shall immediately notify the LRP and the LRP shall file a violation report electronically to the Regional Water Board, within ***30 days,*** of identification of non-compliance using SMARTS. Corrective measures will be implemented immediately following the discharge or written notice of non-

compliance from the Regional Water Board. Discharges and corrective actions will be documented on the NAL/NEL Exceedance Site Evaluation Report Form.

The report to the LRP and to the Regional Water Board will contain the following items:

- The date, time, location, nature of operation and type of unauthorized discharge.
- The cause or nature of the notice or order.
- The control measures (BMPs) deployed before the discharge event, or prior to receiving notice or order.

The date of deployment and type of control measures (BMPs) deployed after the discharge event, or after receiving the notice or order, including additional measures installed or planned to reduce or prevent re-occurrence.

1.7 Annual Report

The General Permit requires that permittees prepare, certify, and electronically submit an Annual Report no later than September 1st of each year. Reporting requirements are identified in Section XVI of the General Permit. Annual reports will be filed in SMARTS and in accordance with information required by the on-line forms.

The required reporting requirements are identified in Section XVI of the General Permit and include (but are not limited to) providing a summary of:

1) A summary of corrective actions taking during the compliance year.

2) Identification of any compliance activates or corrective actions that are implemented.

3) A summary of violations of the General Permit;

4) Date, time, place, and name(s) of the inspector(s) for all sampling, inspections, and field measurement activities;

5) Visual observation and sample collection exception records; and

6) Training documentation of all personnel responsible for General Permit compliance activities.

1.8 Changes to Permit Coverage

The General Permit (Section II.C) allows a permittee to reduce or increase the total acreage covered under the General Permit. There are three (3) opportunities to make changes.

1. When a portion of the project is complete and/or conditions for termination of coverage have been met
2. When ownership of a portion of the project is sold to a different entity
3. When new acreage is added to the project.

To change the acreage covered, the permittee must electronically file modifications to PRDs , including a revised NOI, site map, SWPPP revisions as appropriate, and certification that new landowners have been notified of applicable requirements to

obtain permit coverage . The name, address, phone number, and e-mail address of new landowner must be provided. The General Permit requires this be submitted within ***30 days*** of a reduction or increase in total disturbed area. The SWPPP shall be modified appropriately, shall be logged at the front of the SWPPP and Certification of Amendments are to be kept in ***Appendix D.*** Updated PRD's submitted via SMARTS in SWPPP shall be placed in ***Appendix E.***

1.9 Notice of Termination

Notice of Termination (NOT) must be submitted electronically via SMARTS. A "final site map" and photos are required to be submitted with the NOT. Filing a NOT certifies that all General Permit requirements have been met. The NOT shall be submitted when the construction project is complete and within **90 days** of meeting all General Permit requirements for termination and final stabilization (Section II. Or when all the portions of the site have been transferred to a new owner or all the following conditions have been met:

- For the purpose of final stabilization, the site will not pose any additional sediment discharge risk than it did prior to commencement of construction activity.
- There is no potential for construction related storm water pollutants to be discharge into site runoff.
- Final Stabilization has been reached.
- All construction related equipment, materials and any temporary BMPs no longer needed are removed from the site properly.
- Compliance with Post-Construction standards in Section XIII of the general Permit has been demonstrated.
- Post-construction storm water management measures are installed and a long-term maintenance plan that is designed for a minimum of five years has been developed.
- The owner/Developer shall certified final stabilization conditions are satisfied in the NOT. The NOT must demonstrate through photos, Revised Universal Soil Loss Equation (RUSLE) results, or results of testing and analysis that the project meets all of the requirements of Section II.D.1 of the General Permit by one of the following methods:
    - 70% final cover method -no computational proof required.
    - RUSLE/RUSLE2 method – computational proof required
    - Custom method – The owner/ Developer demonstrates that site complies with "final stabilization" as required by the General Permit (Section II.D.1.A)

SECTION 2 Project Information

2.1 Project and Site Description

2.1.1 Project History

This project has been under design since 2005 and has been thru numerous DSA reviews and approval prior its construction. The Dr. Mildred Elementary School (A.K.A. RII) will be an expansion to the existing Roosevelt Elementary School.

2.1.2 Project Location

The project is located in the City of San Bernardino and it is bounded by 16th street to the north, 14th street to the south, Mount Vernon Avenue to the west and the existing Roosevelt Elementary School and some residential properties to the east.

2.1.3 Project Type and Size.

The project it's approximately 13.5 acres of residential land used. The construction will include grading, installations of underground site utilities and storm drain, concrete paving, storm water retention and percolation, offsite street improvements composed of street widening (under the purview of the City of San Bernardino Public Works Department), and offsite water improvements installation to replace old water main lines under the purview of the San Bernardino Municipal Water Department. The projects exiting and proposed drainage pattern is in the southeasterly direction to the adjacent street, 14th street. This area does not have a current MS4.

2.1.4 Site map (Erosion Control Plan)

An erosion control map showing the existing topography and the proposed Best Management Practices (BMP) during construction to minimize sediment and dirt tracked onto streets and entering underground storm drain systems is attached in Appendix B for reference.

2.1.5 Phasing/Start of Construction

The Dr. Henry Mildred Elemtary School (A.K.A) RII will be constructed in one phase. Construction of the project is anticipated to begin December 2011

2.1.6 Estimated Compeltion date

The construction is schedule to be completed by January 2013. This SWPPP will be updated annually to reflect the site conditions at that time and the anticipated work until a Notice of Termination (NOT) is filed.

2.1.7 Unique Features or Related Projects

The site's previous land used was residential and since its design all of the residential properties have been acquired by the San Bernardino City Unified School District (SBCUSD) and the existing housing demolished. Currently the site is vacant and free of any structures.

I

2.2 Stormwater Run-On From Offsite Areas

The General Permit requires (Section XIV.A.4) that the SWPPP address calculations and design details as well as BMP controls for site run-on. This project is bounded by exiting streets. Therefore the project does not have any site run-on from offsite areas.

2.3 Findings of the Construction Site Sediment and Receiving Water Risk Determination

A construction site risk assessment has been performed for the project and the resultant risk level is ***Risk Level 1.***

Table 2.1 RUSLE Equation Summary

R	K	LS	Watershed Erosion Estimate (tons/acreage)	Sediment Risk
71.44	0.30	0.27	5.79	Low

Table 2.2 Summary of Receiving Water Risk

Receiving Water Name	303(d) Listed for Sediment Related Pollutant(1)	TMDL for Sediment Related Pollutant(1)	Beneficial Uses of COLD, SPAWN, and MIGRATORY(1)
Lytle Creek	☐ Yes ☒ No	☐ Yes ☒ No	☐ Yes ☒ No
Overall Receiving Water Risk			☐ **Low** ☐ **High**
(1) If yes is selected for any option the Receiving Water Risk is High			

This section of the SWPPP summarizes the assumptions and input parameters and findings of the sediment and receiving water risk assessment, including the resulting site risk level. The output from the Risk Determination Worksheet can be found in Appendix B.

Site specific option was used to determine sediment risk. The R- Factor was determined per the NPDES rainfall erosivity factor Calculator for small construction. Based on the Soils report the site consists primarily of sandy clay and silty clay. The soils erodibility factor (K) monograph can be found in Appendix B the LS Factor is based on sheet flow length of approximately 1300 lineal feet and an average slope of approximately 1 %. The Sediment Risk Factor for the site is low.

Risk Level 1 sites are subject to the narrative effluent limitations specified in the General Permit. The narrative effluent limitations require stormwater discharges associated with construction activity to minimize or prevent pollutants in stormwater and authorized non-stormwater through the use of controls, structures, and best management practices.

This SWPPP has been prepared to address ***Risk Level 1*** requirements (General Permit Attachment C)

2.4 Construction Schedule

The project's construction schedule is included in ***Appendix F.*** The subject project will begin December 2011 and will last thru December 2013.

2.5 Potential Construction Site Pollutant Sources

Pollutants other than sediments are found on construction sites. ***Appendix G*** includes practices to minimize contact with storm water for potential pollutant sources. The following is a list of potential chemicals/toxics materials, which may be used at the project site. The following is a list of potential chemicals /toxic materials, which may be used at the project site.

- Adhesive
- Asbestos
- Cleaners
- Coolants
- Curing compounds
- Fertilizers
- Gypsum
- Insulation
- Lumber treated products
- Masonry and concrete
- Metals
- Plaster
- Pesticides/ herbicides
- Petroleum products
- Plumbing products
- Sanitary (septic) fluids
- Sealing agents
- Soil amendments
- Trash
- Vehicle fluids (non-petro)
- Wash water

The project site will be an active construction Zone. During Construction, additional BMP's are necessary to reduce or prevent pollutants in discharges. The following is a list of areas/activities where pollutant discharges are possible and shall be treated with a BMP.

- Material delivery and storage
- Material use
- Solid waste management
- Dewatering operations
- Paving and grading operations
- Potable Water/irrigation
- Vehicle and equipment cleaning
- Vehicle and equipment fueling
- Vehicle and equipment maintenance
- Concrete curing
- Concrete finishing
- Stockpile management
- Hazardous waste management
- Concrete waste management
- Sanitary Waste Management

2.6 Identification of Non-Stormwater Discharges

Non-stormwater discharges consist of discharges which do not originate from precipitation events. The General Permit provides allowances for specified non-stormwater discharges that do not cause erosion or carry other pollutants.

Non-stormwater discharges into storm drainage systems or waterways, which are not authorized under the General Permit and listed in the SWPPP, or authorized under a separate NPDES permit, are prohibited.

Authorized non-stormwater may include de-chlorinated potable water sources such as: fire hydrant flushing, irrigation of vegetative erosion control measures, pipe flushing and testing, water to control dust, uncontaminated groundwater dewatering and other discharges not subject to a separate general NPDES permit adopted by the region.

Non-stormwater discharges must meet the following conditions to be authorized:

- Discharge does not cause or contribute to a water quality standard violation;
- Discharge does not violate other provision of the General Permit;
- Discharge is not prohibited by the applicable Basin Plan;
- The SWPPP includes appropriate BMPs are implemented to prevent or reduce contact of the non-stormwater discharge with construction materials or equipment;
- The discharge does not contain toxic pollutants in toxic amounts or other significant quantities of pollutants;

These authorized non-stormwater discharges will be managed with the stormwater and non-stormwater BMPs of this SWPPP and will be minimized by the QSP.

- PROHIBITED (ILLICIT) DISCHARGES. Non-stormwater discharges into storm drainage systems or waterways, which are not authorized under the General Permit or authorized under a separate NPDES permit, are prohibited. Examples of prohibited discharges common to construction activities include but are not limited to:
- Vehicle and equipment cleaning, fueling and maintenance operations;
- Vehicle and equipment wash water, including concrete washout water;
- Slurries from concrete cutting and coring operations, PCC grinding or AC grinding operations;
- Slurries from concrete or mortar mixing operations;
- Slurries from drilling or boring operations;
- Blast residue from high-pressure washing of structures or surfaces;
- Wash water from cleaning painting equipment;
- Runoff from dust control applications of water or dust palliatives;
- Sanitary and septic wastes;
- Chemical leaks and/or spills of any kind including but not limited to petroleum, paints, cure compounds, etc.

Steps will be taken, including the implementation of appropriate BMPs, to ensure that unauthorized discharges are eliminated, controlled, disposed, or treated on-site.

2.7 Permits and Governing Documents

In addition to the General Permit, the following documents have been taken into account while preparing this SWPPP

- Regional Water Board requirements
- Basin Plan requirements
- Contract Documents
- Air Quality Regulations and Permits

SECTION 3 Best Management Practices

3.1 Schedule for BMP Implementation

All BMPs that will not be disturbed with the initial phase of construction shall be implemented prior to the start of construction. Once the construction has started the QSP is responsible for directing BMP installations and maintenance during all the phases of construction. The QSP shall document amendments to the SWPPP and update the SWPPP site map as necessary depending on the phase of construction and weather conditions. Inactive areas on the construction site that have been disturbed and are not disturbed for at least 14 days shall have effective soil cover implemented.

3.2 Erosion and Sediment Control

This project site shall have erosion control and sediment control devices in place to meet the general permit requirements. The site's BMPs must be effective and result in a reduction or elimination of pollutants in storm water discharges and authorize non storm water discharges during construction activity to the Best Conventional Pollutant Control Technology (BCT), and the Best Available Technology Economically Achievable (BAT) and . These BMPs address erosion, sediment, wind and tracking controls. Once construction is complete, the BMPs installed shall be stabilized to reduce or eliminate pollutants. See table 3.1 for BMP's that shall be implemented to reduce or eliminate pollutants. The selected BMPs meet the requirements for Risk Level 1 as required by the General Permit and are shown on the Site Map. The BMP fact sheets from the CASQA Construction handbook are included in *Appendix H* and referenced in table 3.1.

Table 3.1 Erosion and Sediment BMPs

Project Site BMP's	PRIMARY BMP CATEGORY				CASQA Construction Handbook Fact Sheet
	Erosion	Sediment	wind	Tracking	
Hydroseeding	X				EC-4
Fiber Rolls		X			SE-5
Storm Drain Inlet Protection		X			SE-10
Wind Erosion Control			X		WE-10
Stabilized Construction Entrance/Exit				X	TC-1

Erosion and sediment controls are required by the General Permit to provide effective reduction or elimination of sediment related pollutants in stormwater discharges and authorized non-stormwater discharges from the Site. Applicable BMPs are identified in this section for erosion control, sediment control, tracking control, and wind erosion control.

The following temporary erosion control BMP selection table indicates the BMPs that shall be implemented to control erosion on the construction site:

Table 3.2 Temporary Erosion Control BMPs

CASQA Fact Sheet	BMP Name	Meets a Minimum Requirement[1]	BMP Used		If not used, state reason
			YES	NO	
EC-1	Scheduling	✓			
EC-2	Preservation of Existing Vegetation	✓			
EC-3	Hydraulic Mulch	✓[2]			
EC-4	Hydroseed	✓[2]			
EC-5	Soil Binders	✓[2]			
EC-6	Straw Mulch	✓[2]			
EC-7	Geotextiles and Mats	✓[2]			
EC-8	Wood Mulching	✓[2]			
EC-9	Earth Dike and Drainage Swales	✓[3]			
EC-10	Velocity Dissipation Devices				
EC-11	Slope Drains				
EC-12	Stream Bank Stabilization				
EC-14	Compost Blankets	✓[2]			
EC-15	Soil Preparation-Roughening				
EC-16	Non-Vegetated Stabilization	✓[2]			
WE-1	Wind Erosion Control	✓			
Alternate BMPs Used:					**If used, state reason:**

[1] Applicability to a specific project shall be determined by the QSD.
[2] The QSD shall ensure implementation of one of the minimum measures listed or a combination thereof to achieve and maintain the Risk Level requirements.
[3] Run-on from offsite shall be directed away from all disturbed areas, diversion of offsite flows may require design/analysis by a licensed civil engineer and/or additional environmental permitting

These temporary erosion control BMPs shall be implemented in conformance with the following guidelines and as outlined in the BMP Factsheets provided in ***Appendix H.*** If there is a conflict between documents, the Site Map will prevail over narrative in the body of the SWPPP or guidance in the BMP Fact Sheets. Site specific details in the Site Map prevail over standard details included in the Site Map. The narrative in the body of the SWPPP prevails over guidance in the BMP Fact Sheets.

3.3 Non-Stormwater and Materials Management

This project shall have non-stormwater BMPs in place to meet the General Permit requirements. The site's non-stormwater BMPs shall effectively reduce pollutants associated with material storage, material use, and waste management and reduce and properly manage non-stormwater that is used or generated onsite. This SWPPP satisfies the general Permit requirements that the SWPPP b designed to identify all non-storm water discharges (where no otherwise required to be under a Regional Water Quality Permit) and that the discharges be eliminated, controlled or treated, (see table 3.2). The selected no-stormwater BMPs meet the minimum requirements for Risk Level 1 and prevent pollutants associated with construction activities as required by the General Permit. See table 3, for non-stormwater BMPs that shall be implemented on the project.

Table 3.2 Non-Stormwater BMP's

Project Site BMP's	PRIMARY BMP CATEGORY		CASQA Construction Handbook Fact Sheet
	Non-Stormwater Management	Waste Management and Materials Pollution	
Remove all dirt, gravel , rubbish, refuse, and green waste from the pavement and storm drain adjoining the site. Limit Construction Access routes onto the site and place gravel and rumble strips on them. Do not drive equipments off paved or graveled areas during wet weather. Broom sweep adjacent paved streets on a daily basis specially along the construction access to the project.	X		SE-7
Paving and Grinding Operations	X		NS-3
Vehicle and equipment cleaning: Never Clean machinery, equipment, tools, brushes or rinse containers into a street, storm drain or gutter. Locate concrete wash along areas away from storm drains and open ditches; construct a temporary pit large enough to store liquid and solid	X		NS-8

waste.			
Equipment and maintenance area: use off-site repair shop as much as possible. For on-site maintenance used designated areas away from the storm drain facility and always use a secondary containment area and keep stock pile cleaned up materials nearby. Regularly inspect vehicles and equipment for leaks and repair quickly or remove from the project site. Train employees on spill clean up procedures.	X		NS-10
Concrete Curing			NS-12
Concrete Finishing			NS-13
Material Delivery and storage: Create a contained covered area on the site for the storage of cement, paints and oils, fertilizers, pesticides, or other materials used on the site that have potential of being discharge into the storm drain system through being windblown or in the vent of a material spill			WM-1 WM-1
Material Use		X	WM-2
Stockpile management		X	WM-3
Ensure that concrete/gunite supply trucks or concrete/plaster operations do not discharge wash water into street, gutters or storm drains	X		WM-8
Ensure the containment of sanitation facilities (e.g., portable toilets) to prevent discharges of pollutants to the stormwater drainage system or receiving water.			WM-9

3.4 Materials Mangement and Waste Management

Materials management control practices consist of implementing procedural and structural BMPs for handling, storing and using construction materials to prevent the release of those materials into stormwater discharges. Materials such as fuel for

vehicles and equipment may be used continuously, and materials such as soil binders for temporary stabilization may be used for a discrete period.

Waste management consists of the implementation of procedural and structural BMPs for handling, storing and ensuring proper disposal of wastes to prevent the release of those wastes into stormwater discharges. If the project has a specific Construction Waste Management Plan then waste management should be conducted in accordance with it.

The contractor shall implement Materials and waste management pollution control BMPs to minimize stormwater contact with construction materials, wastes and service areas; and to prevent materials and wastes from being discharged off-site. The primary mechanisms for stormwater contact that shall be addressed will include but not limited to:

- Direct contact with precipitation
- Contact with stormwater run-on and runoff
- Wind dispersion of loose materials
- Direct discharge to the storm drain system through spills or dumping
- Extended contact with some materials and wastes, such as asphalt cold mix and treated wood products, which can leach pollutants into stormwater.

The following Materials and Waste Management BMP selection table indicates the BMPs that shall be implemented to handle materials and control construction site wastes associated with these construction activities. Fact Sheets for Materials and Waste Management BMPs are provided in ***Appendix H.***

Table 3.5 Temporary Materials Management BMPs

CASQA Fact Sheet	BMP Name	Meets a Minimum Requirement[1]	BMP used		If not used, state reason
			YES	NO	
WM-01	Material Delivery and Storage	✓			
WM-02	Material Use	✓			
WM-03	Stockpile Management	✓			
WM-04	Spill Prevention and Control	✓			
WM-05	Solid Waste Management	✓			
WM-06	Hazardous Waste Management	✓			
WM-07	Contaminated Soil Management				
WM-08	Concrete Waste Management	✓			
WM-09	Sanitary-Septic Waste Management	✓			
WM-10	Liquid Waste Management				
Alternate BMPs Used:				**If used, state reason:**	

[1] Applicability to a specific project shall be determined by the QSD.

3.5 Post-Construction Stormwater Management Measures

The effective Date for Post-construction BMP's is January 9th 2013, unless otherwise revised on a subsequent amendment. The measures shall include the following:

- A mechanism shall be created to be responsible for maintaining the site's stormwater measures.
- On-site storm drain inlets clearly marked and maintained with the words "NO Dumping".
- Proper Maintenance of landscaping, with minimal pesticides and fertilizer use that can contribute to stormwater pollution.
- Ensure that no person shall dispose of, nor permit the disposal, directly or indirectly, of vehicle fluids, hazardous materials or rinse water from cleaning tools, equipment, kitchens or trash enclosures or parts into drains.
- Clean all on-site storm drains at least twice a year with one cleaning taking place immediately prior to the rainy season. The San Bernardino City Unified School District may require and implement additional cleanings.
- Regularly but not less than once a month sweep the driveways, sidewalks and paved areas to minimize the accumulation of little and debris. Corners and hard to reach areas shall be swept manually. Debris from pressure washing shall be trapped and collected to prevent entry into storm drain system. Waste water containing soap, cleaning agent or degreaser shall not be discharged into the storm drain system.
- Retention areas shall be mowed and clippings removed on a regular basis.
- Trash and recycling containers shall be enclosed to prevent eater run-on to the area and runoff form the area.
- Maintain landscaping to minimize irrigation and runoff and promote surface filtration.
- Select plan materials to site specific characteristics such as soil type, topography, climate amount of timing of sunlight, prevailing winds, rainfall, air movement, patterns of land use, ecological consistency, and plant interactions to ensure successful establishment.
- Landscaping shall comply with the City of San Bernardino Ordinances and policies regarding water conservation.
- All paved outdoor storage areas to minimize pollutant runoff. Bulk material stored outdoors (long or short term) that may contribute to the pollution of stormwater runoff must be covered as deemed appropriate by the City Engineer/Chief building Official and as required by the State Water Board.

The post construction BMPs that are described above shall be funded and maintained by the LRP.

SECTION 4 BMP Inspection, Maintenance, and Rain Event Action Plans

4.1 BMP Inspection and Maintenance

The Project site shall be inspected a minimum of once per week per General Permit requirements. The project site shall be also inspected before, during, and after qualifying rain events. Blank and completed "Routine Inspection" forms should be a part of Appendix I.

BMPs shall be maintained regularly to ensure proper and effective functionality. If a deficiency is detected during inspection, corrective actions shall be implemented within 72 hours. SWPPP amendments shall me prepared by the QSD if warranted by the problem encountered and corrective action required.

The Owner/developer shall ensure that all inspection, maintenance activities at the project site be performed or supervised by a QSP representing the Owner/Developer. The QSP may delegate any or all these activities to an employee trained to do the task(s) appropriately, but shall ensure adequate employment.

The inspection checklist includes the necessary information covered in Section 7.6. A blank inspection checklist can be found in ***Appendix H*** Completed checklists shall be kept in CSMP Attachment 2 "Monitoring Records.

BMPs shall be maintained regularly to ensure proper and effective functionality. If necessary, corrective actions shall be implemented within 72 hours of identified deficiencies and associated amendments to the SWPPP shall be prepared by the QSD.

Specific details for maintenance, inspection, and repair of Construction Site BMPs can be found in the BMP Factsheets in ***Appendix G.***

4.2 Rain Event Action Plans

Rain Event Action Plans (REAPs) are not required for Risk Level 1 projects.

I

SECTION 5 Training

All of the elements of this SWPPP have been developed by a QSD and shall be implemented by a QSP. The QSP may delegate tasks to trained employees provided adequate supervision and oversight is provided.

The San Bernardino City Unified School District (SBCUSD) shall ensure that all personnel responsible for implementing requirements of the General Permit receive training appropriate for their individual roles and responsibilities on the project. Appropriate personnel shall receive training on SWPPP implementation, BMP inspection and maintenance, and record keeping. The SBCUSD shall document all training activities (formal and informal) and retain a record of training activities in SWPPP ***Appendix I***. Training documentation must also be submitted in the Annual Report. SWPPP Certification requirements for QSD's or QSP's are included in ***Appendix L.***

SECTION 6 Responsible Parties and Operators

6.1 Responsible Parties

A list of authorized representatives has been provided in ***Appendix j.***

Training Documentation for the QSD and QSP has been provided in ***Appendix I***

Implementing all elements of the General Permit and SWPPP, including but not limited to:

- Ensuring all BMPs are implemented, inspected, and properly maintained;
- Performing non-stormwater and stormwater visual observations and inspections;
- Performing non-stormwater and storm sampling and analysis, as required;
- Performing routine inspections and observations;
- Implementing non-stormwater management, and materials and waste management activities such as: monitoring discharges; general Site clean-up; vehicle and equipment cleaning, fueling and maintenance; spill control; ensuring that no materials other than stormwater are discharged in quantities which will have an adverse effect on receiving waters or storm drain systems; etc.;

The QSP may delegate these inspections and activities to an appropriately trained employee, but shall ensure adequacy and adequate deployment.

- Ensuring elimination of unauthorized discharges.
- The QSPs shall be assigned authority by the LRP to mobilize crews in order to make immediate repairs to the control measures.
- Coordinate with the Contractor(s) to assure all of the necessary corrections/repairs are made immediately and that the project complies with the SWPPP, the General Permit and approved plans at all times.

- Notifying the LRP or Authorized Signatory immediately of off-site discharges or other non-compliance events.

6.2 Contractor List

Names and contact information on each individual contractor is not known at the time of completing this SWPP. However, a blank contractor's list is included in ***Appendix K*** and names of contractors that join the project team can be added.

The following list shoes the types of contractors and/or subcontractors that may be employed during the construction of this site.

- Clean up
- Concrete
- Concrete walls
- Driveways
- Electrical
- Geotechnical
- Grading
- Hardware
- Landscaping
- Lumber
- Masonry
- Ornamental iron
- Painting
- Paving
- Pipeline
- Plumbing
- Public utility
- Trenching
- Stairs/Railings

SECTION 7 Construction Site Monitoring Program

7.1 Purpose

The Purpose of the Construction Site monitoring program (CSMP) is to address the following objectives:

- To determined whether non-visible pollutants are present at the construction site and area causing or contributing to exceedances of water quality objectives.
- To determine if immediate corrective actions, additional BMP implementation or SWPPP revisions are necessary to reduce pollutants in storm water discharges and authorized non-stormwater discharges.

7.2 Applicability of Permit Requirements

This project has been determined to be a Risk Level 1 project. The General Permit identifies the following types of monitoring as being applicable for a Risk Level 1 project: Visual inspections of Best Management Practices (BMPs):

- Visual monitoring of the site related to qualifying storm events;
- Visual monitoring of the site for non-stormwater discharges;
- Sampling and analysis of construction site runoff for non-visible pollutants when applicable; and
- Sampling and analysis of construction site runoff as required by the Regional Water Board when applicable.

7.3 Weather and Rain Event Tracking

Tracking the weather and predicted rain events is a critical element of the CSMP. Visual monitoring and inspections requirements of the General Permit are triggered by a qualifying rain event. The General Permit defines a qualifying rain event as any event that produces ½ inch of precipitation. A minimum of 48 hours of dry weather will be used to distinguish between separate qualifying storm events.

The QSP should daily consult the National Oceanographic and Atmospheric Administration (NOAA) for the weather forecasts. These forecasts can be obtained at http://www.srh.noaa.gov/. Weather reports should be printed and maintained with the SWPPP in CSMP Attachment 1 "Weather Reports".

7.4 Safety

This project is not required to collect samples or conduct visual observations (inspections) under the following conditions:

- During dangerous weather conditions such as flooding and electrical storms.
- Outside of scheduled site business hours.

Scheduled site business hours are: _____

If monitoring visual monitoring or sample collection, the site is unsafe because of the dangerous conditions noted above then the QSP shall document the conditions for why an exception to performing the monitoring was necessary. The exemption documentation shall be filed in CSMP Attachment 2 "Monitoring Records".

7.5 Visual Monitoring (Inspections)

Visual monitoring includes observations and inspections. Inspections of BMPs are required to identify and record BMPs that need maintenance to operate effectively, that have failed, or that could fail to operate as intended. Visual observations of the site are required to observe storm water drainage areas to identify any spills, leaks, or uncontrolled pollutant sources.

Table 7.1 identifies the required frequency of visual observations and inspections. Inspections and observations will be conducted at the locations identified in Section 7.5.3

Table 7.1 Summary of Visual Monitoring and Inspections

Type of Inspection	Frequency
Routine Inspections	
BMP Inspections	Weekly[1]
BMP Inspections – Tracking Control	Daily
Non-Stormwater Discharge Observations	Quarterly during daylight hours
Rain Event Triggered Inspections	
Site Inspections Prior to a Qualifying Event	Within 48 hours of a qualifying event [2]
BMP Inspections During an Extended Storm Event	Every 24-hour period of a rainevent[2]
Site Inspections Following a Qualifying Event	Within 48 hours of a qualifying event[2]

[1] *Most BMPs must be inspected weekly; those identified below must be inspected more frequently.*
[2] *Inspections are only required during scheduled site operating hours. Note however, these inspections are required daily regardless of the amount of precipitation.*

7.5.1 Routine Inspections and Observations

Inspections of BMPs are conducted to identify and record:

- BMPs that are properly installed;
- BMPs that need maintenance to operate effectively;
- BMPs that have failed; or
- BMPs that could fail to operate as intended.

7.5.1.1 Routine BMP Inspections

Inspections of BMPs are conducted to identify and record:

- BMPs that are properly installed;
- BMPs that need maintenance to operate effectively;
- BMPs that have failed; or
- BMPs that could fail to operate as intended.

7.5.1.2 Non Storm Water Discharge Observations

Each drainage area will be inspected for the presence of or indications of prior unauthorized and authorized non-stormwater discharges. Inspections will record:

- Presence or evidence of any non-stormwater discharge (authorized or unauthorized);
- Pollutant characteristics (floating and suspended material, sheen, discoloration, turbidity, odor, etc.); and
- Source of discharge.

7.5.2 Rain-Event Triggered Observations and Inspections

Visual observations of the site and inspections of BMPs are required prior to a qualifying rain event; following a qualifying rain event, and every 24-hour period during a qualifying rain event. Pre-rain inspections will be conducted after consulting NOAA and determining that a precipitation event with a 50% or greater probability of precipitation has been predicted.

7.5.2.1 Visual Observations Prior to a Forecasted Qualifying Rain Event

Within 48-hours prior to a qualifying event a stormwater visual monitoring site inspection will include observations of the following locations:

- Stormwater drainage areas to identify any spills, leaks, or uncontrolled pollutant sources;
- BMPs to identify if they have been properly implemented;
- Any stormwater storage and containment areas to detect leaks and ensure maintenance of adequate freeboard.

BMP inspections and visual monitoring will be triggered by a NOAA prediction of rain in the project area.

or

Consistent with guidance from the State Water Resources Control Board, pre-rain BMP inspections and visual monitoring will be triggered by a NOAA forecast that indicates a probability of precipitation of 50% or more in the project area.

or

BMP inspections and visual monitoring will be triggered by a NOAA quantitative predicted forecast (QPF) that indicates ½-inch or more of rain will occur in the project area.

7.5.2.2 BMP Inspections During an Extended Storm Event

During an extended rain event BMP inspections will be conducted to identify and record:

- BMPs that are properly installed;
- BMPs that need maintenance to operate effectively;
- BMPs that have failed; or
- BMPs that could fail to operate as intended.

If the construction site is not accessible during the rain event, the visual inspections shall be performed at all relevant outfalls, discharge points, downstream locations. The inspections should record any projected maintenance activities.

7.5.2.3 Visual Observations Following a Qualifying Rain Event

Within 48 hours following a qualifying rain event (0.5 inches of rain) a stormwater visual monitoring site inspection is required to observe:

- Stormwater drainage areas to identify any spills, leaks, or uncontrolled pollutant sources;
- BMPs to identify if they have been properly designed, implemented, and effective;
- Need for additional BMPs;
- Any stormwater storage and containment areas to detect leaks and ensure maintenance of adequate freeboard; and
- Discharge of stored or contained rain water.

7.5.2.4 Visual Monitoring Procedures

Visual monitoring shall be conducted by the QSP or staff trained by and under the supervision of the QSP.
The name(s) and contact number(s) of the site visual monitoring personnel are listed below and their training qualifications are provided in **Appendix K.**

Assigned inspector: _____ Contact phone: _____

Alternate inspector: _____ Contact phone:_____

Stormwater observations shall be documented on the Visual Inspection Field Log Sheet (see CSMP Attachment 3 "Example Forms"). BMP inspections shall be documented on the site specific BMP inspection checklist. Any photographs used to document observations will be referenced on stormwater site inspection report and maintained with the Monitoring Records in Attachment 2.

The completed reports will be kept in CSMP Attachment 2 "Monitoring Records".

7.6 Water Quality Sampling and Analysis

Not applicable for Risk Level 1

7.8 Watershed Monitoring Option

Not applicable for Risk Level 1

7.9 Quality Assurance and Quality Control

An effective Quality Assurance and Quality Control (QA/QC) plan shall be implemented as part of the CSMP to ensure that analytical data can be used with confidence. QA/QC procedures to be initiated include the following:

- Field logs;
- CoCs;
- QA/QC Samples; and
- Data verification.

Each of these procedures is discussed in more detail in the following sections.

7.9.1 Field Logs

The purpose of field logs is to record sampling information and/or field observations during monitoring that may explain any uncharacteristic analytical results. Field

observations should be noted in the field log for any abnormalities. A Visual Inspection Field Log is included in CSMP ***Attachment 3*** "Example Forms".

7.9 Reporting Requirements and Records Retention

All records of stormwater monitoring information and copies of reports (including Annual Reports) must be retained for a period of at least three (3) years from date of submittal or longer if required by the Regional Water Board.
Results of visual monitoring, field measurements must be kept in the SWPPP along with any other documentation related to the monitoring.

Records are to be kept onsite while construction is ongoing. Records to be retained include:

- The date, place, and time of inspections, sampling, visual observations, and/or measurements, including precipitation;
- The individual(s) who performed the inspections, visual observation, and/or field measurements;
- QA/QC records and results;
- Visual observation collection exemption records;
- The records of any corrective actions and follow-up activities that resulted from analytical results, visual observations, or inspections.

Section 8 References

State Water Resources Control Board (2009). Order 2009-0009-DWQ, NPDES General Permit No. CAS000002: National Pollutant Discharges Elimination System (NPDES) California General Permit for Storm Water Discharge Associated with Construction and Land Disturbing Activities. Available on-line at: http://www.waterboards.ca.gov/water_issues/programs/stormwater/construction.shtml.

State Water Resources Control Board (2010). Order 2010-0014-DWQ, NPDES General Permit No. CAS000002: National Pollutant Discharges Elimination System (NPDES) California General Permit for Storm Water Discharge Associated with Construction and Land Disturbing Activities. Available on-line at: http://www.waterboards.ca.gov/water_issues/programs/stormwater/construction.shtml.

CASQA 2009, *Stormwater BMP Handbook Portal: Construction*, November 2009, www.casqa.org

CSMP Attachment 1: Weather Reports

Place printed NOAA weather forecasts in this Attachment.

CSMP Attachment 2: Example Forms

Place example forms and check lists, e.g. Field Logs, in this Attachment.

Risk Level 1

Visual Inspection Field Log Sheet

Date and Time of Inspection:				Report Date:		
Inspection Type:	☐ Weekly	☐ Before predicted rain	☐ During rain event	☐ Following qualifying rain event	☐ Contained stormwater release	☐ Quarterly Non-stormwater

Site Information

Construction Site Name:	
Construction stage and completed activities:	Approximate area of exposed site:

Weather and Observations

Date Rain Predicted to Occur:		Predicted % chance of rain:	
Estimate storm beginning: _____ (date and time)	Estimate storm duration:_____ (hours)	Estimate time since last storm: _____ (days or hours)	Rain gauge reading: _____ (inches)

Observations: If yes identify location		
Odors	Yes ☐	No ☐
Floating material	Yes ☐	No ☐
Suspended Material	Yes ☐	No ☐
Sheen	Yes ☐	No ☐
Discolorations	Yes ☐	No ☐
Turbidity	Yes ☐	No ☐

Site Inspections

Outfalls or BMPs Evaluated	**Deficiencies Noted**
(add additional sheets or attached detailed BMP Inspection Checklists)	

Photos Taken:	Yes ☐	No ☐	Photo Reference IDs:
Corrective Actions Identified (note if SWPPP/REAP change is needed)			
Inspector Information			
Inspector Name:		Inspector Title:	
Signature:			Date:

ANNUAL SWPPP REVIEW FORM

Reviewer	
Print	Signature

Annual SWPPP Review Checklist

Facility General Information and SWPPP team information is current and accurate	Yes	No	
2) Site Map is current accurate	Yes	No	
3)Significant material inventory is current and accurate	Yes	No	
4) New Exposures, processes and related controls have been documented	Yes	No	
5) Spills have been recorded and reported as appropriate	Yes	No	
6) Records of routines preventive maintenance, housekeeping and employee training are available in the SWPPP file	Yes	No	
7) Comprehensive site inspections have been completed, certified and filed in the SWPPP file	Yes	No	
8) Corrective actions noted in the inspection reports have been competed	Yes	No	
9) Certified Storm Water Operator is current	Yes	No	
10) Annual Fees Have been Paid	Yes	No	
11) Permit Renewal request has been processed	Yes	No	
12) SWPPPP has been reviewed and signed by a Certified Storm Water Operator and the Permittee or designated representative	Yes	No	

Additional Comments:

APPENDIX A

Construction General Permit

Linda S. Adams
Secretary for Environmental Protection

State Water Resources Control Board

Division of Water Quality
1001 I Street • Sacramento, California 95814 • (916) 341-5455
Mailing Address: P.O. Box 100 • Sacramento, California • 95812-0100
Fax (916) 341-5463 • http://www.waterboards.ca.gov

Arnold Schwarzenegger
Governor

NATIONAL POLLUTANT DISCHARGE ELIMINATION SYSTEM (NPDES)
GENERAL PERMIT FOR
STORM WATER DISCHARGES
ASSOCIATED WITH CONSTRUCTION AND LAND DISTURBANCE
ACTIVITIES

ORDER NO. 2009-0009-DWQ
NPDES NO. **CAS000002**

This Order was adopted by the State Water Resources Control Board on:	**September 2, 2009**
This Order shall become effective on:	**July 1, 2010**
This Order shall expire on:	**September 2, 2014**

IT IS HEREBY ORDERED, that this Order supersedes Order No. 99-08-DWQ [as amended by Order No. 2010-0014-DWQ] except for enforcement purposes. The Discharger shall comply with the requirements in this Order to meet the provisions contained in Division 7 of the California Water Code (commencing with section 13000) and regulations adopted thereunder, and the provisions of the federal Clean Water Act and regulations and guidelines adopted thereunder.

I, Jeanine Townsend, Clerk to the Board, do hereby certify that this Order with all attachments is a full, true, and correct copy of an Order adopted by the State Water Resources Control Board, on September 2, 2009.

AYE: Vice Chair Frances Spivy-Weber
Board Member Arthur G. Baggett, Jr.
Board Member Tam M. Doduc

NAY: Chairman Charles R. Hoppin

ABSENT: None

ABSTAIN: None

Jeanine Townsend

Jeanine Townsend
Clerk to the Board

Linda S. Adams
Secretary for Environmental Protection

State Water Resources Control Board

Division of Water Quality
1001 I Street • Sacramento, California 95814 • (916) 341-5455
Mailing Address: P.O. Box 100 • Sacramento, California • 95812-0100
Fax (916) 341-5463 • http://www.waterboards.ca.gov

Arnold Schwarzenegger
Governor

NATIONAL POLLUTANT DISCHARGE ELIMINATION SYSTEM (NPDES) GENERAL PERMIT FOR STORM WATER DISCHARGES ASSOCIATED WITH CONSTRUCTION AND LAND DISTURBANCE ACTIVITIES

ORDER NO. 2010-0014-DWQ
NPDES NO. CAS000002

Order No. 2009-0009-DWQ was adopted by the State Water Resources Control Board on:	**September 2, 2009**
Order No. 2009-0009-DWQ became effective on:	**July 1, 2010**
Order No. 2009-0009-DWQ shall expire on:	**September 2, 2014**
This Order, which amends Order No. 2009-0009-DWQ, was adopted by the State Water Resources Control Board on:	**November 16, 2010**
This Order shall become effective on:	**February 14, 2011**

IT IS HEREBY ORDERED that this Order amends Order No. 2009-0009-DWQ. Additions to Order No. 2009-0009-DWQ are reflected in blue-underline text and deletions are reflected in red-strikeout text.

IT IS FURTHER ORDERED that staff are directed to prepare and post a conformed copy of Order No. 2009-0009-DWQ incorporating the revisions made by this Order.

I, Jeanine Townsend, Clerk to the Board, do hereby certify that this Order with all attachments is a full, true, and correct copy of an Order adopted by the State Water Resources Control Board, on **November 16, 2010.**

AYE: Chairman Charles R. Hoppin
Vice Chair Frances Spivy-Weber
Board Member Arthur G. Baggett, Jr.
Board Member Tam M. Doduc

NAY: None

ABSENT: None

ABSTAIN: None

Jeanine Townsend

Jeanine Townsend
Clerk to the Board

TABLE OF CONTENTS

I. FINDINGS 1
II. CONDITIONS FOR PERMIT COVERAGE 14
III. DISCHARGE PROHIBITIONS 20
IV. SPECIAL PROVISIONS 22
V. EFFLUENT STANDARDS 28
VI. RECEIVING WATER LIMITATIONS 31
VII. TRAINING QUALIFICATIONS AND CERTIFICATION REQUIREMENTS 32
VIII. RISK DETERMINATION 33
IX. RISK LEVEL 1 REQUIREMENTS 34
X. RISK LEVEL 2 REQUIREMENTS 34
XI. RISK LEVEL 3 REQUIREMENTS 34
XII. ACTIVE TREATMENT SYSTEMS (ATS) 34
XIII. POST-CONSTRUCTION STANDARDS 35
XIV. SWPPP REQUIREMENTS 37
XV. REGIONAL WATER BOARD AUTHORITIES 38
XVI. ANNUAL REPORTING REQUIREMENTS 39

LIST OF ATTACHMENTS

Attachment A – Linear Underground/Overhead Requirements
Attachment A.1 – LUP Type Determination
Attachment A.2 – LUP Permit Registration Documents
Attachment B – Permit Registration Documents
Attachment C – Risk Level 1 Requirements
Attachment D – Risk Level 2 Requirements
Attachment E – Risk Level 3 Requirements
Attachment F – Active Treatment System (ATS) Requirements

LIST OF APPENDICES

Appendix 1 – Risk Determination Worksheet
Appendix 2 – Post-Construction Water Balance Performance Standard
Appendix 2.1 – Post-Construction Water Balance Performance Standard Spreadsheet
Appendix 3 – Bioassessment Monitoring Guidelines
Appendix 4 – Adopted/Implemented Sediment TMDLs
Appendix 5 – Glossary
Appendix 6 – Acronyms
Appendix 7 – State and Regional Water Resources Control Board Contacts

STATE WATER RESOURCES CONTROL BOARD
ORDER NO. 2009-0009-DWQ
[AS AMENDED BY ORDER NO. 2010-0014-DWQ]
NATIONAL POLLUTANT DISCHARGE ELIMINATION SYSTEM
GENERAL PERMIT NO. CAS000002

WASTE DISCHARGE REQUIREMENTS
FOR
DISCHARGES OF STORM WATER RUNOFF ASSOCIATED WITH
CONSTRUCTION AND LAND DISTURBANCE ACTIVITIES

I. FINDINGS

A. General Findings

The State Water Resources Control Board (State Water Board) finds that:

1. The federal Clean Water Act (CWA) prohibits certain discharges of storm water containing pollutants except in compliance with a National Pollutant Discharge Elimination System (NPDES) permit (Title 33 United States Code (U.S.C.) §§ 1311 and 1342(p); also referred to as Clean Water Act (CWA) §§ 301 and 402(p)). The U.S. Environmental Protection Agency (U.S. EPA) promulgates federal regulations to implement the CWA's mandate to control pollutants in storm water runoff discharges. (Title 40 Code of Federal Regulations (C.F.R.) Parts 122, 123, and 124). The federal statutes and regulations require discharges to surface waters comprised of storm water associated with construction activity, including demolition, clearing, grading, and excavation, and other land disturbance activities (except operations that result in disturbance of less than one acre of total land area and which are not part of a larger common plan of development or sale), to obtain coverage under an NPDES permit. The NPDES permit must require implementation of Best Available Technology Economically Achievable (BAT) and Best Conventional Pollutant Control Technology (BCT) to reduce or eliminate pollutants in storm water runoff. The NPDES permit must also include additional requirements necessary to implement applicable water quality standards.

2. This General Permit authorizes discharges of storm water associated with construction activity so long as the dischargers comply with all requirements, provisions, limitations and prohibitions in the permit. In addition, this General Permit regulates the discharges of storm water associated with construction activities from all Linear

Underground/Overhead Projects resulting in the disturbance of greater than or equal to one acre (Attachment A).

3. This General Permit regulates discharges of pollutants in storm water associated with construction activity (storm water discharges) to waters of the United States from construction sites that disturb one or more acres of land surface, or that are part of a common plan of development or sale that disturbs more than one acre of land surface.

4. This General Permit does not preempt or supersede the authority of local storm water management agencies to prohibit, restrict, or control storm water discharges to municipal separate storm sewer systems or other watercourses within their jurisdictions.

5. This action to adopt a general NPDES permit is exempt from the provisions of Chapter 3 of the California Environmental Quality Act (CEQA) (Public Resources Code Section 21100, et seq.), pursuant to Section 13389 of the California Water Code.

6. Pursuant to 40 C.F.R. § 131.12 and State Water Board Resolution No. 68-16,[1] which incorporates the requirements of § 131.12 where applicable, the State Water Board finds that discharges in compliance with this General Permit will not result in the lowering of water quality standards, and are therefore consistent with those provisions. Compliance with this General Permit will result in improvements in water quality.

7. This General Permit serves as an NPDES permit in compliance with CWA § 402 and will take effect on July 1, 2010 by the State Water Board provided the Regional Administrator of the U.S. EPA has no objection. If the U.S. EPA Regional Administrator objects to its issuance, the General Permit will not become effective until such objection is withdrawn.

8. Following adoption and upon the effective date of this General Permit, the Regional Water Quality Control Boards (Regional Water Boards) shall enforce the provisions herein.

9. Regional Water Boards establish water quality standards in Basin Plans. The State Water Board establishes water quality standards in various statewide plans, including the California Ocean Plan. U.S. EPA establishes water quality standards in the National Toxic Rule (NTR) and the California Toxic Rule (CTR).

[1] Resolution No. 68-16 generally requires that existing water quality be maintained unless degradation is justified based on specific findings.

10. This General Permit does not authorize discharges of fill or dredged material regulated by the U.S. Army Corps of Engineers under CWA § 404 and does not constitute a waiver of water quality certification under CWA § 401.

11. The primary storm water pollutant at construction sites is excess sediment. Excess sediment can cloud the water, which reduces the amount of sunlight reaching aquatic plants, clog fish gills, smother aquatic habitat and spawning areas, and impede navigation in our waterways. Sediment also transports other pollutants such as nutrients, metals, and oils and greases.

12. Construction activities can impact a construction site's runoff sediment supply and transport characteristics. These modifications, which can occur both during and after the construction phase, are a significant cause of degradation of the beneficial uses established for water bodies in California. Dischargers can avoid these effects through better construction site design and activity practices.

13. This General Permit recognizes four distinct phases of construction activities. The phases are Grading and Land Development Phase, Streets and Utilities Phase, Vertical Construction Phase, and Final Landscaping and Site Stabilization Phase. Each phase has activities that can result in different water quality effects from different water quality pollutants. This General Permit also recognizes inactive construction as a category of construction site type.

14. Compliance with any specific limits or requirements contained in this General Permit does not constitute compliance with any other applicable requirements.

15. Following public notice in accordance with State and Federal laws and regulations, the State Water Board heard and considered all comments and testimony in a public hearing on 06/03/2009. The State Water Board has prepared written responses to all significant comments.

16. Construction activities obtaining coverage under the General Permit may have multiple discharges subject to requirements that are specific to general, linear, and/or active treatment system discharge types.

17. The State Water Board may reopen the permit if the U.S. EPA adopts a final effluent limitation guideline for construction activities.

B. Activities Covered Under the General Permit

18. Any construction or demolition activity, including, but not limited to, clearing, grading, grubbing, or excavation, or any other activity that results in a land disturbance of equal to or greater than one acre.

19. Construction activity that results in land surface disturbances of less than one acre if the construction activity is part of a larger common plan of development or the sale of one or more acres of disturbed land surface.

20. Construction activity related to residential, commercial, or industrial development on lands currently used for agriculture including, but not limited to, the construction of buildings related to agriculture that are considered industrial pursuant to U.S. EPA regulations, such as dairy barns or food processing facilities.

21. Construction activity associated with Linear Underground/Overhead Utility Projects (LUPs) including, but not limited to, those activities necessary for the installation of underground and overhead linear facilities (e.g., conduits, substructures, pipelines, towers, poles, cables, wires, connectors, switching, regulating and transforming equipment and associated ancillary facilities) and include, but are not limited to, underground utility mark-out, potholing, concrete and asphalt cutting and removal, trenching, excavation, boring and drilling, access road and pole/tower pad and cable/wire pull station, substation construction, substructure installation, construction of tower footings and/or foundations, pole and tower installations, pipeline installations, welding, concrete and/or pavement repair or replacement, and stockpile/borrow locations.

22. Discharges of sediment from construction activities associated with oil and gas exploration, production, processing, or treatment operations or transmission facilities.[2]

23. Storm water discharges from dredge spoil placement that occur outside of U.S. Army Corps of Engineers jurisdiction (upland sites) and that disturb one or more acres of land surface from construction activity are covered by this General Permit. Construction sites that intend to disturb one or more acres of land within the jurisdictional boundaries of

[2] Pursuant to the Ninth Circuit Court of Appeals' decision in *NRDC v. EPA* (9th Cir. 2008) 526 F.3d 591, and subsequent denial of the U.S. EPA's petition for reconsideration in November 2008, oil and gas construction activities discharging storm water contaminated only with sediment are no longer exempt from the NPDES program.

a CWA § 404 permit should contact the appropriate Regional Water Board to determine whether this permit applies to the site.

C. Activities Not Covered Under the General Permit

24. Routine maintenance to maintain original line and grade, hydraulic capacity, or original purpose of the facility.

25. Disturbances to land surfaces solely related to agricultural operations such as disking, harrowing, terracing and leveling, and soil preparation.

26. Discharges of storm water from areas on tribal lands; construction on tribal lands is regulated by a federal permit.

27. Construction activity and land disturbance involving discharges of storm water within the Lake Tahoe Hydrologic Unit. The Lahontan Regional Water Board has adopted its own permit to regulate storm water discharges from construction activity in the Lake Tahoe Hydrologic Unit (Regional Water Board 6SLT). Owners of construction sites in this watershed must apply for the Lahontan Regional Water Board permit rather than the statewide Construction General Permit.

28. Construction activity that disturbs less than one acre of land surface, and that is not part of a larger common plan of development or the sale of one or more acres of disturbed land surface.

29. Construction activity covered by an individual NPDES Permit for storm water discharges.

30. Discharges from small (1 to 5 acre) construction activities with an approved Rainfall Erosivity Waiver authorized by U.S. EPA Phase II regulations certifying to the State Board that small construction activity will occur only when the Rainfall Erosivity Factor is less than 5 ("R" in the Revised Universal Soil Loss Equation).

31. Landfill construction activity that is subject to the Industrial General Permit.

32. Construction activity that discharges to Combined Sewer Systems.

33. Conveyances that discharge storm water runoff combined with municipal sewage.

34. Discharges of storm water identified in CWA § 402(*l*)(2), 33 U.S.C. § 1342(*l*)(2).

35. Discharges occurring in basins that are not tributary or hydrologically connected to waters of the United States (for more information contact your Regional Water Board).

D. Obtaining and Modifying General Permit Coverage

36. This General Permit requires all dischargers to electronically file all Permit Registration Documents (PRDs), Notices of Termination (NOT), changes of information, annual reporting, and other compliance documents required by this General Permit through the State Water Board's Storm water Multi-Application and Report Tracking System (SMARTS) website.

37. Any information provided to the Regional Water Board shall comply with the Homeland Security Act and any other federal law that concerns security in the United States; any information that does not comply should not be submitted.

38. This General Permit grants an exception from the Risk Determination requirements for existing sites covered under Water Quality Orders No. 99-08-DWQ, and No. 2003-0007-DWQ. For certain sites, adding additional requirements may not be cost effective. Construction sites covered under Water Quality Order No. 99-08-DWQ shall obtain permit coverage at the Risk Level 1. LUPs covered under Water Quality Order No. 2003-0007-DWQ shall obtain permit coverage as a Type 1 LUP. The Regional Water Boards have the authority to require Risk Determination to be performed on sites currently covered under Water Quality Orders No. 99-08-DWQ and No. 2003-0007-DWQ where they deem it necessary. The State Water Board finds that there are two circumstances when it may be appropriate for the Regional Water Boards to require a discharger that had filed an NOI under State Water Board Order No. 99-08-DWQ to recalculate the site's risk level. These circumstances are: (1) when the discharger has a demonstrated history of noncompliance with State Water Board Order No. 99-08-DWQ or; (2) when the discharger's site poses a significant risk of causing or contributing to an exceedance of a water quality standard without the implementation of the additional Risk Level 2 or 3 requirements.

E. Prohibitions

39. All discharges are prohibited except for the storm water and non-storm water discharges specifically authorized by this General Permit or another NPDES permit. Non-storm water discharges include a wide variety of sources, including improper dumping, spills, or leakage from storage tanks or transfer areas. Non-storm water discharges may

contribute significant pollutant loads to receiving waters. Measures to control spills, leakage, and dumping, and to prevent illicit connections during construction must be addressed through structural as well as non-structural Best Management Practices (BMPs)[3]. The State Water Board recognizes, however, that certain non-storm water discharges may be necessary for the completion of construction.

40. This General Permit prohibits all discharges which contain a hazardous substance in excess of reportable quantities established in 40 C.F.R. §§ 117.3 and 302.4, unless a separate NPDES Permit has been issued to regulate those discharges.

41. This General Permit incorporates discharge prohibitions contained in water quality control plans, as implemented by the State Water Board and the nine Regional Water Boards.

42. Pursuant to the Ocean Plan, discharges to Areas of Special Biological Significance (ASBS) are prohibited unless covered by an exception that the State Water Board has approved.

43. This General Permit prohibits the discharge of any debris[4] from construction sites. Plastic and other trash materials can cause negative impacts to receiving water beneficial uses. The State Water Board encourages the use of more environmentally safe, biodegradable materials on construction sites to minimize the potential risk to water quality.

F. Training

44. In order to improve compliance with and to maintain consistent enforcement of this General Permit, all dischargers are required to appoint two positions - the Qualified SWPPP Developer (QSD) and the Qualified SWPPP Practitioner (QSP) - who must obtain appropriate training. Together with the key stakeholders, the State and Regional Water Boards are leading the development of this curriculum through a collaborative organization called The Construction General Permit (CGP) Training Team.

45. The Professional Engineers Act (Bus. & Prof. Code section 6700, et seq.) requires that all engineering work must be performed by a California licensed engineer.

---

[3] BMPs are scheduling of activities, prohibitions of practices, maintenance procedures, and other management practices to prevent or reduce the discharge of pollutants to waters of the United States. BMPs also include treatment requirements, operating procedures, and practice to control site runoff, spillage or leaks, sludge or waste disposal, or drainage from raw material storage.

[4] Litter, rubble, discarded refuse, and remains of destroyed inorganic anthropogenic waste.

G. Determining and Reducing Risk

46. The risk of accelerated erosion and sedimentation from wind and water depends on a number of factors, including proximity to receiving water bodies, climate, topography, and soil type.

47. This General Permit requires dischargers to assess the risk level of a site based on both sediment transport and receiving water risk. This General Permit contains requirements for Risk Levels 1, 2 and 3, and LUP Risk Type 1, 2, and 3 (Attachment A). Risk levels are established by determining two factors: first, calculating the site's sediment risk; and second, receiving water risk during periods of soil exposure (i.e. grading and site stabilization). Both factors are used to determine the site-specific Risk Level(s). LUPs can be determined to be Type 1 based on the flowchart in Attachment A.1.

48. Although this General Permit does not mandate specific setback distances, dischargers are encouraged to set back their construction activities from streams and wetlands whenever feasible to reduce the risk of impacting water quality (e.g., natural stream stability and habitat function). Because there is a reduced risk to receiving waters when setbacks are used, this General Permit gives credit to setbacks in the risk determination and post-construction storm water performance standards. The risk calculation and runoff reduction mechanisms in this General Permit are expected to facilitate compliance with any Regional Water Board and local agency setback requirements, and to encourage voluntary setbacks wherever practicable.

49. Rain events can occur at any time of the year in California. Therefore, a Rain Event Action Plan (REAP) is necessary for Risk Level 2 and 3 traditional construction projects (LUPs exempt) to ensure that active construction sites have adequate erosion and sediment controls implemented prior to the onset of a storm event, even if construction is planned only during the dry season.

50. Soil particles smaller than 0.02 millimeters (mm) (i.e., finer than medium silt) do not settle easily using conventional measures for sediment control (i.e., sediment basins). Given their long settling time, dislodging these soils results in a significant risk that fine particles will be released into surface waters and cause unacceptable downstream impacts. If operated correctly, an Active Treatment System (ATS[5]) can prevent or reduce the release of fine particles from construction sites.

---

[5] An ATS is a treatment system that employs chemical coagulation, chemical flocculation, or electro coagulation in order to reduce turbidity caused by fine suspended sediment.

Use of an ATS can effectively reduce a site's risk of impacting receiving waters.

51. Dischargers located in a watershed area where a Total Maximum Daily Load (TMDL) has been adopted or approved by the Regional Water Board or U.S. EPA may be required by a separate Regional Water Board action to implement additional BMPs, conduct additional monitoring activities, and/or comply with an applicable waste load allocation and implementation schedule. Such dischargers may also be required to obtain an individual Regional Water Board permit specific to the area.

H. Effluent Standards

52. The State Water Board convened a blue ribbon panel of storm water experts that submitted a report entitled, "The Feasibility of Numeric Effluent Limits Applicable to Discharges of Storm Water Associated with Municipal, Industrial and Construction Activities," dated June 19, 2006. The panel concluded that numeric limits or action levels are technically feasible to control construction storm water discharges, provided that certain conditions are considered. The panel also concluded that numeric effluent limitations (NELs) are feasible for discharges from construction sites that utilize an ATS. The State Water Board has incorporated the expert panel's suggestions into this General Permit, which includes both numeric action levels (NALs) and NELs for pH and turbidity, and special numeric limits for ATS discharges.

Numeric Effluent Limitations

53. Discharges of storm water from construction activities may become contaminated from alkaline construction materials resulting in high pH (greater than pH 7). Alkaline construction materials include, but are not limited to, hydrated lime, concrete, mortar, cement kiln dust (CKD), Portland cement treated base (CTB), fly ash, recycled concrete, and masonry work. This General Permit includes an NEL for pH (6.0-9.0) that applies only at sites that exhibit a "high risk of high pH discharge." A "high risk of high pH discharge" can occur during the complete utilities phase, the complete vertical build phase, and any portion of any phase where significant amounts of materials are placed directly on the land at the site in a manner that could result in significant alterations to the background pH of any discharges.

54. For Risk Level 3 discharges, this General Permit establishes technology-based, numeric effluent limitations (NELs) for turbidity of 500 NTU. Exceedances of the turbidity NEL constitutes a violation of this General Permit.

55. This General Permit establishes a 5 year, 24 hour (expressed in inches of rainfall) Compliance Storm Event exemption from the technology-based NELs for Risk Level 3 dischargers.

Determining Compliance with Numeric Limitations

56. This General Permit sets a pH NAL of 6.5 to 8.5, and a turbidity NAL of 250 NTU. The purpose of the NAL and its associated monitoring requirement is to provide operational information regarding the performance of the measures used at the site to minimize the discharge of pollutants and to protect beneficial uses and receiving waters from the adverse effects of construction-related storm water discharges. The NALs in this General Permit for pH and turbidity are not directly enforceable and do not constitute NELs.

57. This General Permit requires dischargers with NAL exceedances to immediately implement additional BMPs and revise their Storm Water Pollution Prevention Plans (SWPPPs) accordingly to either prevent pollutants and authorized non-storm water discharges from contaminating storm water, or to substantially reduce the pollutants to levels consistently below the NALs. NAL exceedances are reported in the State Water Boards SMARTS system, and the discharger is required to provide an NAL Exceedance Report when requested by a Regional Water Board.

58. If run-on is caused by a forest fire or any other natural disaster, then NELs do not apply.

59. Exceedances of the NELs are a violation of this Permit. This General Permit requires dischargers with NEL exceedances to implement additional monitoring, BMPs, and revise their SWPPPs accordingly. Dischargers are required to notify the State and Regional Water Boards of the violation through the State Water Boards SMARTs system, and provide an NEL Violation Report sharing additional information concerning the NEL exceedance.

I. Receiving Water Limitations

60. This General Permit requires all enrolled dischargers to determine the receiving waters potentially affected by their discharges and to comply with all applicable water quality standards, including any more stringent standards applicable to a water body.

J. Sampling, Monitoring, Reporting and Record Keeping

61. Visual monitoring of storm water and non-storm water discharges is required for all sites subject to this General Permit.

62. Records of all visual monitoring inspections are required to remain on-site during the construction period and for a minimum of three years.

63. For all Risk Level 3 and Risk Level 2 sites, this General Permit requires effluent monitoring for pH and turbidity. Sampling, analysis and monitoring requirements for effluent monitoring for pH and turbidity are contained in this General Permit.

64. Risk Level 3 sites in violation of the Numeric Effluent Limitations contained in this General Permit and with direct discharges to receiving water are required to conduct receiving water monitoring.

65. For Risk Level 3 sites larger than 30 acres and with direct discharges to receiving waters, this General Permit requires bioassessment sampling before and after site completion to determine if significant degradation to the receiving water's biota has occurred. Bioassessment sampling guidelines are contained in this General Permit.

66. A summary and evaluation of the sampling and analysis results will be submitted in the Annual Reports.

67. This General Permit contains sampling, analysis and monitoring requirements for non-visible pollutants at all sites subject to this General Permit.

68. Compliance with the General Permit relies upon dischargers to electronically self-report any discharge violations and to comply with any Regional Water Board enforcement actions.

69. This General Permit requires that all dischargers maintain a paper or electronic copy of all required records for three years from the date generated or date submitted, whichever is last. These records must be available at the construction site until construction is completed. For LUPs, these documents may be retained in a crew member's vehicle and made available upon request.

K. Active Treatment System (ATS) Requirements

70. Active treatment systems add chemicals to facilitate flocculation, coagulation and filtration of suspended sediment particles. The uncontrolled release of these chemicals to the environment can negatively affect the beneficial uses of receiving waters and/or degrade water quality (e.g., acute and chronic toxicity). Additionally, the batch storage and treatment of storm water through an ATS' can potentially

cause physical impacts on receiving waters if storage volume is inadequate or due to sudden releases of the ATS batches and improperly designed outfalls.

71. If designed, operated and maintained properly an ATS can achieve very high removal rates of suspended sediment (measured as turbidity), albeit at sometimes significantly higher costs than traditional erosion/sediment control practices. As a result, this General Permit establishes NELs consistent with the expected level of typical ATS performance.

72. This General Permit requires discharges of storm water associated with construction activity that undergo active treatment to comply with special operational and effluent limitations to ensure that these discharges do not adversely affect the beneficial uses of the receiving waters or cause degradation of their water quality.

73. For ATS discharges, this General Permit establishes technology-based NELs for turbidity.

74. This General Permit establishes a 10 year, 24 hour (expressed in inches of rainfall) Compliance Storm Event exemption from the technology-based numeric effluent limitations for ATS discharges. Exceedances of the ATS turbidity NEL constitutes a violation of this General Permit.

L. Post-Construction Requirements

75. This General Permit includes performance standards for post-construction that are consistent with State Water Board Resolution No. 2005-0006, "Resolution Adopting the Concept of Sustainability as a Core Value for State Water Board Programs and Directing Its Incorporation," and 2008-0030, "Requiring Sustainable Water Resources Management." The requirement for all construction sites to match pre-project hydrology will help ensure that the physical and biological integrity of aquatic ecosystems are sustained. This "runoff reduction" approach is analogous in principle to Low Impact Development (LID) and will serve to protect related watersheds and waterbodies from both hydrologic-based and pollution impacts associated with the post-construction landscape.

76. LUP projects are not subject to post-construction requirements due to the nature of their construction to return project sites to pre-construction conditions.

M. Storm Water Pollution Prevention Plan Requirements

77. This General Permit requires the development of a site-specific SWPPP. The SWPPP must include the information needed to demonstrate compliance with all requirements of this General Permit, and must be kept on the construction site and be available for review. The discharger shall ensure that a QSD develops the SWPPP.

78. To ensure proper site oversight, this General Permit requires a Qualified SWPPP Practitioner to oversee implementation of the BMPs required to comply with this General Permit.

N. Regional Water Board Authorities

79. Regional Water Boards are responsible for implementation and enforcement of this General Permit. A general approach to permitting is not always suitable for every construction site and environmental circumstances. Therefore, this General Permit recognizes that Regional Water Boards must have some flexibility and authority to alter, approve, exempt, or rescind permit authority granted under this General Permit in order to protect the beneficial uses of our receiving waters and prevent degradation of water quality.

IT IS HEREBY ORDERED that all dischargers subject to this General Permit shall comply with the following conditions and requirements (including all conditions and requirements as set forth in Attachments A, B, C, D, E and F)[6]:

II. CONDITIONS FOR PERMIT COVERAGE

A. Linear Underground/Overhead Projects (LUPs)

1. Linear Underground/Overhead Projects (LUPs) include, but are not limited to, any conveyance, pipe, or pipeline for the transportation of any gaseous, liquid (including water and wastewater for domestic municipal services), liquescent, or slurry substance; any cable line or wire for the transmission of electrical energy; any cable line or wire for communications (e.g. telephone, telegraph, radio or television messages); and associated ancillary facilities. Construction activities associated with LUPs include, but are not limited to, (a) those activities necessary for the installation of underground and overhead linear facilities (e.g., conduits, substructures, pipelines, towers, poles, cables, wires, connectors, switching, regulating and transforming equipment, and associated ancillary facilities); and include, but are not limited to, (b) underground utility mark-out, potholing, concrete and asphalt cutting and removal, trenching, excavation, boring and drilling, access road and pole/tower pad and cable/wire pull station, substation construction, substructure installation, construction of tower footings and/or foundations, pole and tower installations, pipeline installations, welding, concrete and/ or pavement repair or replacement, and stockpile/borrow locations.

2. The Legally Responsible Person is responsible for obtaining coverage under the General Permit where the construction of pipelines, utility lines, fiber-optic cables, or other linear underground/overhead projects will occur across several properties unless the LUP construction activities are covered under another construction storm water permit.

3. Only LUPs shall comply with the conditions and requirements in Attachment A, A.1 & A.2 of this Order. The balance of this Order is not applicable to LUPs except as indicated in Attachment A.

[6] These attachments are part of the General Permit itself and are not separate documents that are capable of being updated independently by the State Water Board.

B. Obtaining Permit Coverage Traditional Construction Sites

1. The Legally Responsible Person (LRP) (see Special Provisions, Electronic Signature and Certification Requirements, Section IV.I.1) must obtain coverage under this General Permit.

2. To obtain coverage, the LRP must electronically file Permit Registration Documents (PRDs) prior to the commencement of construction activity. Failure to obtain coverage under this General Permit for storm water discharges to waters of the United States is a violation of the CWA and the California Water Code.

3. PRDs shall consist of:

   a. Notice of Intent (NOI)
   b. Risk Assessment (Section VIII)
   c. Site Map
   d. Storm Water Pollution Prevention Plan (Section XIV)
   e. Annual Fee
   f. Signed Certification Statement

   Any information provided to the Regional Water Board shall comply with the Homeland Security Act and any other federal law that concerns security in the United States; any information that does not comply should not be submitted.

   Attachment B contains additional PRD information. Dischargers must electronically file the PRDs, and mail the appropriate annual fee to the State Water Board.

4. This permit is effective on July 1, 2010.

   a. **Dischargers Obtaining Coverage On or After July 1, 2010:** All dischargers requiring coverage on or after July 1, 2010, shall electronically file their PRDs prior to the commencement of construction activities, and mail the appropriate annual fee no later than seven days prior to the commencement of construction activities. Permit coverage shall not commence until the PRDs and the annual fee are received by the State Water Board, and a WDID number is assigned and sent by SMARTS.

   b. **Dischargers Covered Under 99-08-DWQ and 2003-0007-DWQ:** Existing dischargers subject to State Water Board Order No. 99-08-DWQ (existing dischargers) will continue coverage under 99-08-DWQ until July 1, 2010. After July 1, 2010, all NOIs subject to State Water Board Order No. 99-08-DWQ will be terminated.

Existing dischargers shall electronically file their PRDs no later than July 1, 2010. If an existing discharger's site acreage subject to the annual fee has changed, it shall mail a revised annual fee no less than seven days after receiving the revised annual fee notification, **or else lose permit coverage**. All existing dischargers shall be exempt from the risk determination requirements in Section VIII of this General Permit until two years after permit adoption. All existing dischargers are therefore subject to Risk Level 1 requirements regardless of their site's sediment and receiving water risks. However, a Regional Board retains the authority to require an existing discharger to comply with the Section VIII risk determination requirements.

5. The discharger is only considered covered by this General Permit upon receipt of a Waste Discharger Identification (WDID) number assigned and sent by the State Water Board Storm water Multi-Application and Report Tracking System (SMARTS). In order to demonstrate compliance with this General Permit, the discharger must obtain a WDID number and must present documentation of a valid WDID upon demand.

6. During the period this permit is subject to review by the U.S. EPA, the prior permit (State Water Board Order No. 99-08-DWQ) remains in effect. Existing dischargers under the prior permit will continue to have coverage under State Water Board Order No. 99-08-DWQ until this General Permit takes effect on July 1, 2010. Dischargers who complete their projects and electronically file an NOT prior to July 1, 2010, are not required to obtain coverage under this General Permit.

7. Small Construction Rainfall Erosivity Waiver

   EPA's Small Construction Erosivity Waiver applies to sites between one and five acres demonstrating that there are no adverse water quality impacts.

   Dischargers eligible for a Rainfall Erosivity Waiver based on low erosivity potential shall complete the electronic Notice of Intent (NOI) and Sediment Risk form through the State Water Board's SMARTS system, certifying that the construction activity will take place during a period when the value of the rainfall erosivity factor is less than five. Where the LRP changes or another LRP is added during construction, the new LRP must also submit a waiver certification through the SMARTS system.

   If a small construction site continues beyond the projected completion date given on the waiver certification, the LRP shall recalculate the

rainfall erosivity factor for the new project duration and submit this information through the SMARTS system. If the new R factor is below five (5), the discharger shall update through SMARTS all applicable information on the waiver certification and retain a copy of the revised waiver onsite. The LRP shall submit the new waiver certification 30 days prior to the projected completion date listed on the original waiver form to assure exemption from permitting requirements is uninterrupted. If the new R factor is five (5) or above, the LRP shall be required to apply for coverage under this Order.

8. In the case of a public emergency that requires immediate construction activities, a discharger shall submit a brief description of the emergency construction activity within five days of the onset of construction, and then shall submit all PRDs within thirty days.

C. Revising Permit Coverage for Change of Acreage or New Ownership

1. The discharger may reduce or increase the total acreage covered under this General Permit when a portion of the site is complete and/or conditions for termination of coverage have been met (See Section II.D Conditions for Termination of Coverage); when ownership of a portion of the site is sold to a different entity; or when new acreage, subject to this General Permit, is added to the site.

2. Within 30 days of a reduction or increase in total disturbed acreage, the discharger shall electronically file revisions to the PRDs that include:

   a. A revised NOI indicating the new project size;

   b. A revised site map showing the acreage of the site completed, acreage currently under construction, acreage sold/transferred or added, and acreage currently stabilized in accordance with the Conditions for Termination of Coverage in Section II.D below.

   c. SWPPP revisions, as appropriate; and

   d. Certification that any new landowners have been notified of applicable requirements to obtain General Permit coverage. The certification shall include the name, address, telephone number, and e-mail address of the new landowner.

   e. If the project acreage has increased, dischargers shall mail payment of revised annual fees within 14 days of receiving the revised annual fee notification.

3. The discharger shall continue coverage under the General Permit for any parcel that has not achieved "Final Stabilization" as defined in Section II.D.

4. When an LRP with active General Permit coverage transfers its LRP status to another person or entity that qualifies as an LRP, the existing LRP shall inform the new LRP of the General Permit's requirements. In order for the new LRP to continue the construction activity on its parcel of property, the new LRP, or the new LRP's approved signatory, must submit PRDs in accordance with this General Permit's requirements.

D. Conditions for Termination of Coverage

1. Within 90 days of when construction is complete or ownership has been transferred, the discharger shall electronically file a Notice of Termination (NOT), a final site map, and photos through the State Water Boards SMARTS system. Filing a NOT certifies that all General Permit requirements have been met. The Regional Water Board will consider a construction site complete only when all portions of the site have been transferred to a new owner, or all of the following conditions have been met:

   a. For purposes of "final stabilization," the site will not pose any additional sediment discharge risk than it did prior to the commencement of construction activity;

   b. There is no potential for construction-related storm water pollutants to be discharged into site runoff;

   c. Final stabilization has been reached;

   d. Construction materials and wastes have been disposed of properly;

   e. Compliance with the Post-Construction Standards in Section XIII of this General Permit has been demonstrated;

   f. Post-construction storm water management measures have been installed and a long-term maintenance plan[7] has been established; and

   g. All construction-related equipment, materials and any temporary BMPs no longer needed are removed from the site.

[7] For the purposes of this requirement a long-term maintenance plan will be designed for a minimum of five years, and will describe the procedures to ensure that the post-construction storm water management measures are adequately maintained.

2. The discharger shall certify that final stabilization conditions are satisfied in their NOT. Failure to certify shall result in continuation of permit coverage and annual billing.

3. The NOT must demonstrate through photos, RUSLE or RUSLE2, or results of testing and analysis that the site meets all of the conditions above (Section II.D.1) and the final stabilization condition (Section II.D.1.a) is attained by one of the following methods:

   a. "70% final cover method," no computational proof required

      OR:

   b. "RUSLE or RUSLE2 method," computational proof required

      OR:

   c. "Custom method", the discharger shall demonstrate in some other manner than a or b, above, that the site complies with the "final stabilization" requirement in Section II.D.1.a.

III. DISCHARGE PROHIBITIONS

A. Dischargers shall not violate any discharge prohibitions contained in applicable Basin Plans or statewide water quality control plans. Waste discharges to Areas of Special Biological Significance (ASBS) are prohibited by the California Ocean Plan, unless granted an exception issued by the State Water Board.

B. All discharges are prohibited except for the storm water and non-storm water discharges specifically authorized by this General Permit or another NPDES permit.

C. Authorized non-storm water discharges may include those from de-chlorinated potable water sources such as: fire hydrant flushing, irrigation of vegetative erosion control measures, pipe flushing and testing, water to control dust, uncontaminated ground water from dewatering, and other discharges not subject to a separate general NPDES permit adopted by a Regional Water Board. The discharge of non-storm water is authorized under the following conditions:

1. The discharge does not cause or contribute to a violation of any water quality standard;

2. The discharge does not violate any other provision of this General Permit;

3. The discharge is not prohibited by the applicable Basin Plan;

4. The discharger has included and implemented specific BMPs required by this General Permit to prevent or reduce the contact of the non-storm water discharge with construction materials or equipment.

5. The discharge does not contain toxic constituents in toxic amounts or (other) significant quantities of pollutants;

6. The discharge is monitored and meets the applicable NALs and NELs; and

7. The discharger reports the sampling information in the Annual Report.

If any of the above conditions are not satisfied, the discharge is not authorized by this General Permit. The discharger shall notify the Regional Water Board of any anticipated non-storm water discharges not already authorized by this General Permit or another NPDES permit, to determine whether a separate NPDES permit is necessary.

D. Debris resulting from construction activities are prohibited from being discharged from construction sites.

E. When soil contamination is found or suspected and a responsible party is not identified, or the responsible party fails to promptly take the appropriate action, the discharger shall have those soils sampled and tested to ensure proper handling and public safety measures are implemented. The discharger shall notify the appropriate local, State, and federal agency(ies) when contaminated soil is found at a construction site, and will notify the appropriate Regional Water Board.

IV. SPECIAL PROVISIONS

A. Duty to Comply

1. The discharger shall comply with all of the conditions of this General Permit. Any permit noncompliance constitutes a violation of the Clean Water Act (CWA) and the Porter-Cologne Water Quality Control Act and is grounds for enforcement action and/or removal from General Permit coverage.

2. The discharger shall comply with effluent standards or prohibitions established under Section 307(a) of the CWA for toxic pollutants within the time provided in the regulations that establish these standards or prohibitions, even if this General Permit has not yet been modified to incorporate the requirement.

B. General Permit Actions

1. This General Permit may be modified, revoked and reissued, or terminated for cause. The filing of a request by the discharger for a General Permit modification, revocation and reissuance, or termination, or a notification of planned changes or anticipated noncompliance does not annul any General Permit condition.

2. If any toxic effluent standard or prohibition (including any schedule of compliance specified in such effluent standard or prohibition) is promulgated under Section 307(a) of the CWA for a toxic pollutant which is present in the discharge and that standard or prohibition is more stringent than any limitation on the pollutant in this General Permit, this General Permit shall be modified or revoked and reissued to conform to the toxic effluent standard or prohibition and the dischargers so notified.

C. Need to Halt or Reduce Activity Not a Defense

It shall not be a defense for a discharger in an enforcement action that it would have been necessary to halt or reduce the permitted activity in order to maintain compliance with the conditions of this General Permit.

D. Duty to Mitigate

The discharger shall take all responsible steps to minimize or prevent any discharge in violation of this General Permit, which has a reasonable likelihood of adversely affecting human health or the environment.

E. Proper Operation and Maintenance

The discharger shall at all times properly operate and maintain any facilities and systems of treatment and control (and related appurtenances) which are installed or used by the discharger to achieve compliance with the conditions of this General Permit. Proper operation and maintenance also includes adequate laboratory controls and appropriate quality assurance procedures. Proper operation and maintenance may require the operation of backup or auxiliary facilities or similar systems installed by a discharger when necessary to achieve compliance with the conditions of this General Permit.

F. Property Rights

This General Permit does not convey any property rights of any sort or any exclusive privileges, nor does it authorize any injury to private property or any invasion of personal rights, nor does it authorize any infringement of Federal, State, or local laws or regulations.

G. Duty to Maintain Records and Provide Information

1. The discharger shall maintain a paper or electronic copy of all required records, including a copy of this General Permit, for three years from the date generated or date submitted, whichever is last. These records shall be available at the construction site until construction is completed.

2. The discharger shall furnish the Regional Water Board, State Water Board, or U.S. EPA, within a reasonable time, any requested information to determine compliance with this General Permit. The discharger shall also furnish, upon request, copies of records that are required to be kept by this General Permit.

H. Inspection and Entry

The discharger shall allow the Regional Water Board, State Water Board, U.S. EPA, and/or, in the case of construction sites which discharge through a municipal separate storm sewer, an authorized representative of the municipal operator of the separate storm sewer system receiving the discharge, upon the presentation of credentials and other documents as may be required by law, to:

1. Enter upon the discharger's premises at reasonable times where a regulated construction activity is being conducted or where records must be kept under the conditions of this General Permit;

2. Access and copy at reasonable times any records that must be kept under the conditions of this General Permit;

3. Inspect at reasonable times the complete construction site, including any off-site staging areas or material storage areas, and the erosion/sediment controls; and

4. Sample or monitor at reasonable times for the purpose of ensuring General Permit compliance.

I. Electronic Signature and Certification Requirements

1. All Permit Registration Documents (PRDs) and Notices of Termination (NOTs) shall be electronically signed, certified, and submitted via SMARTS to the State Water Board. Either the Legally Responsible Person (LRP), as defined in Appendix 5 – Glossary, or a person legally authorized to sign and certify PRDs and NOTs on behalf of the LRP (the LRP's Approved Signatory, as defined in Appendix 5 - Glossary) must submit all information electronically via SMARTS.

2. Changes to Authorization. If an Approved Signatory's authorization is no longer accurate, a new authorization satisfying the requirements of paragraph (a) of this section must be submitted via SMARTS prior to or together with any reports, information or applications to be signed by an Approved Signatory.

3. All Annual Reports, or other information required by the General Permit (other than PRDs and NOTs) or requested by the Regional Water Board, State Water Board, U.S. EPA, or local storm water management agency shall be certified and submitted by the LRP or the LRP's Approved Signatory.

J. Certification

Any person signing documents under Section IV.I above, shall make the following certification:

"I certify under penalty of law that this document and all attachments were prepared under my direction or supervision in accordance with a system designed to assure that qualified personnel properly gather and evaluate the information submitted. Based on my inquiry of the person or persons who manage the system or those persons directly responsible for gathering the information, to the best of my knowledge and belief, the information submitted is, true, accurate, and complete. I am aware that there are significant penalties for submitting false information, including the possibility of fine and imprisonment for knowing violations."

K. Anticipated Noncompliance

The discharger shall give advance notice to the Regional Water Board and local storm water management agency of any planned changes in the construction activity, which may result in noncompliance with General Permit requirements.

L. Bypass

Bypass[8] is prohibited. The Regional Water Board may take enforcement action against the discharger for bypass unless:

1. Bypass was unavoidable to prevent loss of life, personal injury or severe property damage;[9]

2. There were no feasible alternatives to bypass, such as the use of auxiliary treatment facilities, retention of untreated waste, or maintenance during normal periods of equipment downtime. This condition is not satisfied if adequate back-up equipment should have been installed in the exercise of reasonable engineering judgment to prevent a bypass that could occur during normal periods of equipment downtime or preventative maintenance;

3. The discharger submitted a notice at least ten days in advance of the need for a bypass to the Regional Water Board; or

4. The discharger may allow a bypass to occur that does not cause effluent limitations to be exceeded, but only if it is for essential maintenance to assure efficient operation. In such a case, the above bypass conditions are not applicable. The discharger shall submit notice of an unanticipated bypass as required.

M. Upset

1. A discharger that wishes to establish the affirmative defense of an upset[10] in an action brought for noncompliance shall demonstrate,

---

[8] The intentional diversion of waste streams from any portion of a treatment facility

[9] Severe property damage means substantial physical damage to property, damage to the treatment facilities that causes them to become inoperable, or substantial and permanent loss of natural resources that can reasonably be expected to occur in the absence of a bypass. Severe property damage does not mean economic loss caused by delays in production.

[10] An exceptional incident in which there is unintentional and temporary noncompliance the technology based numeric effluent limitations because of factors beyond the reasonable control of the discharger. An upset does not include noncompliance to the extent caused by operational error, improperly designed treatment facilities, inadequate treatment facilities, lack of preventative maintenance, or careless or improper operation.

through properly signed, contemporaneous operating logs, or other relevant evidence that:

a. An upset occurred and that the discharger can identify the cause(s) of the upset

b. The treatment facility was being properly operated by the time of the upset

c. The discharger submitted notice of the upset as required; and

d. The discharger complied with any remedial measures required

2. No determination made before an action of noncompliance occurs, such as during administrative review of claims that noncompliance was caused by an upset, is final administrative action subject to judicial review.

3. In any enforcement proceeding, the discharger seeking to establish the occurrence of an upset has the burden of proof

N. Penalties for Falsification of Reports

Section 309(c)(4) of the CWA provides that any person who knowingly makes any false material statement, representation, or certification in any record or other document submitted or required to be maintained under this General Permit, including reports of compliance or noncompliance shall upon conviction, be punished by a fine of not more than $10,000 or by imprisonment for not more than two years or by both.

O. Oil and Hazardous Substance Liability

Nothing in this General Permit shall be construed to preclude the institution of any legal action or relieve the discharger from any responsibilities, liabilities, or penalties to which the discharger is or may be subject to under Section 311 of the CWA.

P. Severability

The provisions of this General Permit are severable; and, if any provision of this General Permit or the application of any provision of this General Permit to any circumstance is held invalid, the application of such provision to other circumstances and the remainder of this General Permit shall not be affected thereby.

Q. Reopener Clause

This General Permit may be modified, revoked and reissued, or terminated for cause due to promulgation of amended regulations, receipt of U.S. EPA guidance concerning regulated activities, judicial decision, or in accordance with 40 Code of Federal Regulations (CFR) 122.62, 122.63, 122.64, and 124.5.

R. Penalties for Violations of Permit Conditions

1. Section 309 of the CWA provides significant penalties for any person who violates a permit condition implementing Sections 301, 302, 306, 307, 308, 318, or 405 of the CWA or any permit condition or limitation implementing any such section in a permit issued under Section 402. Any person who violates any permit condition of this General Permit is subject to a civil penalty not to exceed $37,500[11] per calendar day of such violation, as well as any other appropriate sanction provided by Section 309 of the CWA.

2. The Porter-Cologne Water Quality Control Act also provides for civil and criminal penalties, which in some cases are greater than those under the CWA.

S. Transfers

This General Permit is not transferable.

T. Continuation of Expired Permit

This General Permit continues in force and effect until a new General Permit is issued or the SWRCB rescinds this General Permit. Only those dischargers authorized to discharge under the expiring General Permit are covered by the continued General Permit.

[11] May be further adjusted in accordance with the Federal Civil Penalties Inflation Adjustment Act.

V. EFFLUENT STANDARDS

A. Narrative Effluent Limitations

1. Storm water discharges and authorized non-storm water discharges regulated by this General Permit shall not contain a hazardous substance equal to or in excess of reportable quantities established in 40 C.F.R. §§ 117.3 and 302.4, unless a separate NPDES Permit has been issued to regulate those discharges.

2. Dischargers shall minimize or prevent pollutants in storm water discharges and authorized non-storm water discharges through the use of controls, structures, and management practices that achieve BAT for toxic and non-conventional pollutants and BCT for conventional pollutants.

B. Numeric Effluent Limitations (NELs)

Table 1- Numeric Effluent Limitations, Numeric Action Levels, Test Methods, Detection Limits, and Reporting Units

Parameter	Test Method	Discharge Type	Min. Detection Limit	Units	Numeric Action Level	Numeric Effluent Limitation
pH	Field test with calibrated portable instrument	Risk Level 2	0.2	pH units	lower NAL = 6.5 upper NAL = 8.5	N/A
		Risk Level 3			lower NAL = 6.5 upper NAL = 8.5	lower NEL = 6.0 upper NEL = 9.0
Turbidity	EPA 0180.1 and/or field test with calibrated portable instrument	Risk Level 2	1	NTU	250 NTU	N/A
		Risk Level 3			250 NTU	500 NTU

1. Numeric Effluent Limitations (NELs):

   a. **Storm Event, Daily Average pH Limits** – For Risk Level 3 dischargers, the pH of storm water and non-storm water discharges

shall be within the ranges specified in Table 1 during any site phase where there is a "high risk of pH discharge."[12]

b. **Storm Event Daily Average Turbidity Limit** – For Risk Level 3 dischargers, the turbidity of storm water and non-storm water discharges shall not exceed 500 NTU.

2. If daily average sampling results are outside the range of pH NELs (i.e., is below the lower NEL for pH or exceeds the upper NEL for pH) or exceeds the turbidity NEL (as listed in Table 1), the discharger is in violation of this General Permit and shall electronically file monitoring results in violation within 5 business days of obtaining the results.

3. **Compliance Storm Event**:

   Discharges of storm water from Risk Level 3 sites shall comply with applicable NELs (above) unless the storm event causing the discharges is determined after the fact to be equal to or larger than the Compliance Storm Event (expressed in inches of rainfall). The Compliance Storm Event for Risk Level 3 discharges is the 5 year, 24 hour storm (expressed in tenths of an inch of rainfall), as determined by using these maps:

   http://www.wrcc.dri.edu/pcpnfreq/nca5y24.gif
   http://www.wrcc.dri.edu/pcpnfreq/sca5y24.gif

   Compliance storm event verification shall be done by reporting on-site rain gauge readings as well as nearby governmental rain gauge readings.

4. Dischargers shall not be required to comply with NELs if the site receives run-on from a forest fire or any other natural disaster.

C. Numeric Action Levels (NALs)

1. For Risk Level 2 and 3 dischargers, the lower storm event average NAL for pH is 6.5 pH units and the upper storm event average NAL for pH is 8.5 pH units. The discharger shall take actions as described below if the discharge is outside of this range of pH values.

[12] A period of high risk of pH discharge is defined as a project's complete utilities phase, complete vertical build phase, and any portion of any phase where significant amounts of materials are placed directly on the land at the site in a manner that could result in significant alterations of the background pH of the discharges.

2. For Risk Level 2 and 3 dischargers, the NAL storm event daily average for turbidity is 250 NTU. The discharger shall take actions as described below if the discharge is outside of this range of turbidity values.

3. Whenever the results from a storm event daily average indicate that the discharge is below the lower NAL for pH, exceeds the upper NAL for pH, or exceeds the turbidity NAL (as listed in Table 1), the discharger shall conduct a construction site and run-on evaluation to determine whether pollutant source(s) associated with the site's construction activity may have caused or contributed to the NAL exceedance and shall immediately implement corrective actions if they are needed.

4. The site evaluation shall be documented in the SWPPP and specifically address whether the source(s) of the pollutants causing the exceedance of the NAL:

   a. Are related to the construction activities and whether additional BMPs are required to (1) meet BAT/BCT requirements; (2) reduce or prevent pollutants in storm water discharges from causing exceedances of receiving water objectives; and (3) determine what corrective action(s) were taken or will be taken and with a description of the schedule for completion.

      AND/OR:

   b. Are related to the run-on associated with the construction site location and whether additional BMPs measures are required to (1) meet BAT/BCT requirements; (2) reduce or prevent pollutants in storm water discharges from causing exceedances of receiving water objectives; and (3) what corrective action(s) were taken or will be taken with a description of the schedule for completion.

VI. RECEIVING WATER LIMITATIONS

A. The discharger shall ensure that storm water discharges and authorized non-storm water discharges to any surface or ground water will not adversely affect human health or the environment.

B. The discharger shall ensure that storm water discharges and authorized non-storm water discharges will not contain pollutants in quantities that threaten to cause pollution or a public nuisance.

C. The discharger shall ensure that storm water discharges and authorized non-storm water discharges will not contain pollutants that cause or contribute to an exceedance of any applicable water quality objectives or water quality standards (collectively, WQS) contained in a Statewide Water Quality Control Plan, the California Toxics Rule, the National Toxics Rule, or the applicable Regional Water Board's Water Quality Control Plan (Basin Plan).

D. Dischargers located within the watershed of a CWA § 303(d) impaired water body, for which a TMDL has been approved by the U.S. EPA, shall comply with the approved TMDL if it identifies "construction activity" or land disturbance as a source of the pollution.

VII. TRAINING QUALIFICATIONS AND CERTIFICATION REQUIREMENTS

A. General

The discharger shall ensure that all persons responsible for implementing requirements of this General Permit shall be appropriately trained in accordance with this Section. Training should be both formal and informal, occur on an ongoing basis, and should include training offered by recognized governmental agencies or professional organizations. Those responsible for preparing and amending SWPPPs shall comply with the requirements in this Section VII.

The discharger shall provide documentation of all training for persons responsible for implementing the requirements of this General Permit in the Annual Reports.

B. SWPPP Certification Requirements

1. **Qualified SWPPP Developer:** The discharger shall ensure that SWPPPs are written, amended and certified by a Qualified SWPPP Developer (QSD). A QSD shall have one of the following registrations or certifications, and appropriate experience, as required for:

   a. A California registered professional civil engineer;

   b. A California registered professional geologist or engineering geologist;

   c. A California registered landscape architect;

   d. A professional hydrologist registered through the American Institute of Hydrology;

   e. A Certified Professional in Erosion and Sediment Control (CPESC) ™ registered through Enviro Cert International, Inc.;

   f. A Certified Professional in Storm Water Quality (CPSWQ) ™ registered through Enviro Cert International, Inc.; or

   g. A professional in erosion and sediment control registered through the National Institute for Certification in Engineering Technologies (NICET).

Effective two years after the adoption date of this General Permit, a QSD shall have attended a State Water Board-sponsored or approved QSD training course.

2. The discharger shall list the name and telephone number of the currently designated Qualified SWPPP Developer(s) in the SWPPP.

3. **Qualified SWPPP Practitioner:** The discharger shall ensure that all BMPs required by this General Permit are implemented by a Qualified SWPPP Practitioner (QSP). A QSP is a person responsible for non-storm water and storm water visual observations, sampling and analysis. Effective two years from the date of adoption of this General Permit, a QSP shall be either a QSD or have one of the following certifications:

   a. A certified erosion, sediment and storm water inspector registered through Enviro Cert International, Inc.; or

   b. A certified inspector of sediment and erosion control registered through Certified Inspector of Sediment and Erosion Control, Inc.

   Effective two years after the adoption date of this General Permit, a QSP shall have attended a State Water Board-sponsored or approved QSP training course.

4. The LRP shall list in the SWPPP, the name of any Approved Signatory, and provide a copy of the written agreement or other mechanism that provides this authority from the LRP in the SWPPP.

5. The discharger shall include, in the SWPPP, a list of names of all contractors, subcontractors, and individuals who will be directed by the Qualified SWPPP Practitioner. This list shall include telephone numbers and work addresses. Specific areas of responsibility of each subcontractor and emergency contact numbers shall also be included.

6. The discharger shall ensure that the SWPPP and each amendment will be signed by the Qualified SWPPP Developer. The discharger shall include a listing of the date of initial preparation and the date of each amendment in the SWPPP.

VIII. RISK DETERMINATION

The discharger shall calculate the site's sediment risk and receiving water risk during periods of soil exposure (i.e. grading and site stabilization) and use the calculated risks to determine a Risk Level(s) using the methodology in

Appendix 1. For any site that spans two or more planning watersheds,[13] the discharger shall calculate a separate Risk Level for each planning watershed. The discharger shall notify the State Water Board of the site's Risk Level determination(s) and shall include this determination as a part of submitting the PRDs. If a discharger ends up with more than one Risk Level determination, the Regional Water Board may choose to break the project into separate levels of implementation.

IX. RISK LEVEL 1 REQUIREMENTS

Risk Level 1 Dischargers shall comply with the requirements included in Attachment C of this General Permit.

X. RISK LEVEL 2 REQUIREMENTS

Risk Level 2 Dischargers shall comply with the requirements included in Attachment D of this General Permit.

XI. RISK LEVEL 3 REQUIREMENTS

Risk Level 3 Dischargers shall comply with the requirements included in Attachment E of this General Permit.

XII. ACTIVE TREATMENT SYSTEMS (ATS)

Dischargers choosing to implement an ATS on their site shall comply with all of the requirements in Attachment F of this General Permit.

[13] Planning watershed: defined by the Calwater Watershed documents as a watershed that ranges in size from approximately 3,000 to 10,000 acres http://cain.ice.ucdavis.edu/calwater/calwfaq.html, http://gis.ca.gov/catalog/BrowseRecord.epl?id=22175 .

XIII. POST-CONSTRUCTION STANDARDS

A. All dischargers shall comply with the following runoff reduction requirements unless they are located within an area subject to post-construction standards of an active Phase I or II municipal separate storm sewer system (MS4) permit that has an approved Storm Water Management Plan.

1. This provision shall take effect three years from the adoption date of this permit, or later at the discretion of the Executive Officer of the Regional Board.

2. The discharger shall demonstrate compliance with the requirements of this section by submitting with their NOI a map and worksheets in accordance with the instructions in Appendix 2. The discharger shall use non-structural controls unless the discharger demonstrates that non-structural controls are infeasible or that structural controls will produce greater reduction in water quality impacts.

3. The discharger shall, through the use of non-structural and structural measures as described in Appendix 2, replicate the pre-project water balance (for this permit, defined as the volume of rainfall that ends up as runoff) for the smallest storms up to the 85th percentile storm event (or the smallest storm event that generates runoff, whichever is larger). Dischargers shall inform Regional Water Board staff at least 30 days prior to the use of any structural control measure used to comply with this requirement. Volume that cannot be addressed using non-structural practices shall be captured in structural practices and approved by the Regional Water Board. When seeking Regional Board approval for the use of structural practices, dischargers shall document the infeasibility of using non-structural practices on the project site, or document that there will be fewer water quality impacts through the use of structural practices.

4. For sites whose disturbed area exceeds two acres, the discharger shall preserve the pre-construction drainage density (miles of stream length per square mile of drainage area) for all drainage areas within the area serving a first order stream[14] or larger stream and ensure that post-project time of runoff concentration is equal or greater than pre-project time of concentration.

[14] A first order stream is defined as a stream with no tributaries.

B. All dischargers shall implement BMPs to reduce pollutants in storm water discharges that are reasonably foreseeable after all construction phases have been completed at the site (Post-construction BMPs).

XIV. SWPPP REQUIREMENTS

A. The discharger shall ensure that the Storm Water Pollution Prevention Plans (SWPPPs) for all traditional project sites are developed and amended or revised by a QSD. The SWPPP shall be designed to address the following objectives:

1. All pollutants and their sources, including sources of sediment associated with construction, construction site erosion and all other activities associated with construction activity are controlled;

2. Where not otherwise required to be under a Regional Water Board permit, all non-storm water discharges are identified and either eliminated, controlled, or treated;

3. Site BMPs are effective and result in the reduction or elimination of pollutants in storm water discharges and authorized non-storm water discharges from construction activity to the BAT/BCT standard;

4. Calculations and design details as well as BMP controls for site run-on are complete and correct, and

5. Stabilization BMPs installed to reduce or eliminate pollutants after construction are completed.

B. To demonstrate compliance with requirements of this General Permit, the QSD shall include information in the SWPPP that supports the conclusions, selections, use, and maintenance of BMPs.

C. The discharger shall make the SWPPP available at the construction site during working hours while construction is occurring and shall be made available upon request by a State or Municipal inspector. When the original SWPPP is retained by a crewmember in a construction vehicle and is not currently at the construction site, current copies of the BMPs and map/drawing will be left with the field crew and the original SWPPP shall be made available via a request by radio/telephone.

XV. REGIONAL WATER BOARD AUTHORITIES

A. In the case where the Regional Water Board does not agree with the discharger's self-reported risk level (e.g., they determine themselves to be a Level 1 Risk when they are actually a Level 2 Risk site), Regional Water Boards may either direct the discharger to reevaluate the Risk Level(s) for their site or terminate coverage under this General Permit.

B. Regional Water Boards may terminate coverage under this General Permit for dischargers who fail to comply with its requirements or where they determine that an individual NPDES permit is appropriate.

C. Regional Water Boards may require dischargers to submit a Report of Waste Discharge / NPDES permit application for Regional Water Board consideration of individual requirements.

D. Regional Water Boards may require additional Monitoring and Reporting Program Requirements, including sampling and analysis of discharges to sediment-impaired water bodies.

E. Regional Water Boards may require dischargers to retain records for more than the three years required by this General Permit.

XVI. ANNUAL REPORTING REQUIREMENTS

A. All dischargers shall prepare and electronically submit an Annual Report no later than September 1 of each year.

B. The discharger shall certify each Annual Report in accordance with the Special Provisions.

C. The discharger shall retain an electronic or paper copy of each Annual Report for a minimum of three years after the date the annual report is filed.

D. The discharger shall include storm water monitoring information in the Annual Report consisting of:

1. a summary and evaluation of all sampling and analysis results, including copies of laboratory reports;

2. the analytical method(s), method reporting unit(s), and method detection limit(s) of each analytical parameter (analytical results that are less than the method detection limit shall be reported as "less than the method detection limit");

3. a summary of all corrective actions taken during the compliance year;

4. identification of any compliance activities or corrective actions that were not implemented;

5. a summary of all violations of the General Permit;

6. the names of individual(s) who performed the facility inspections, sampling, visual observation (inspections), and/or measurements;

7. the date, place, time of facility inspections, sampling, visual observation (inspections), and/or measurements, including precipitation (rain gauge); and

8. the visual observation and sample collection exception records and reports specified in Attachments C, D, and E.

E. The discharger shall provide training information in the Annual Report consisting of:

1. documentation of all training for individuals responsible for all activities associated with compliance with this General Permit;

2. documentation of all training for individuals responsible for BMP installation, inspection, maintenance, and repair; and

3. documentation of all training for individuals responsible for overseeing, revising, and amending the SWPPP.

APPENDIX B

Notice of Intent (NOI), Risk Assessment, Vicinity Map, Site Map, Erosion Control Plan, WDID Confirmation, Annual Fee, signed Certification and statement and Annual Report.

NOTICE OF INTENT (NOI) as submitted
on May 2010 and uploaded to the
SMARTS SYSTEM ON JULY 2010

Vicinity Map

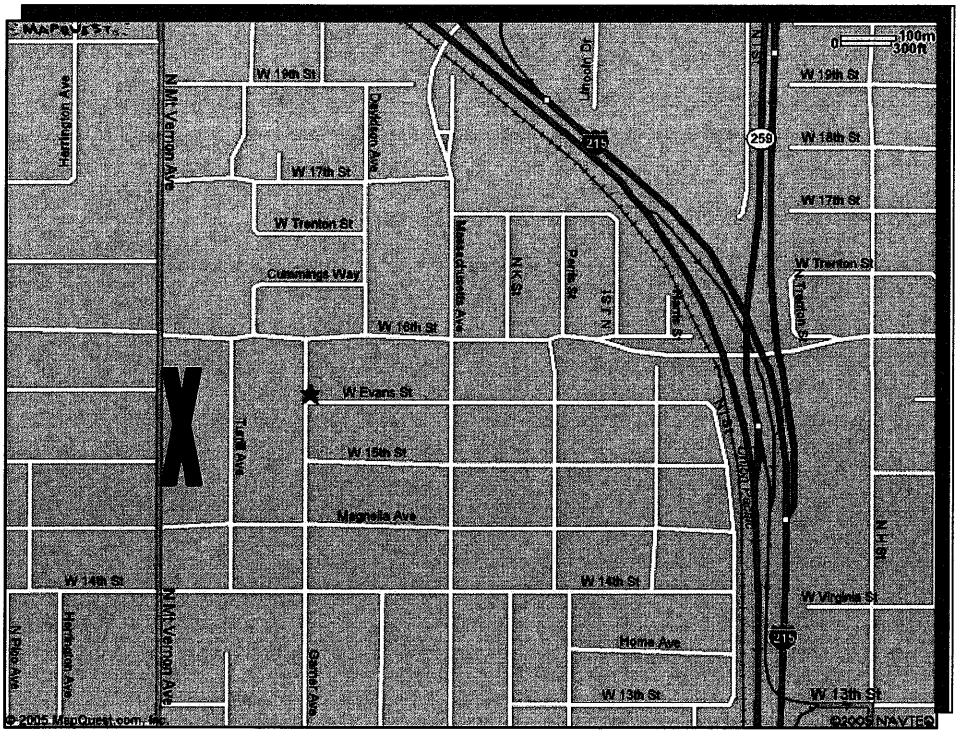

SITE MAP

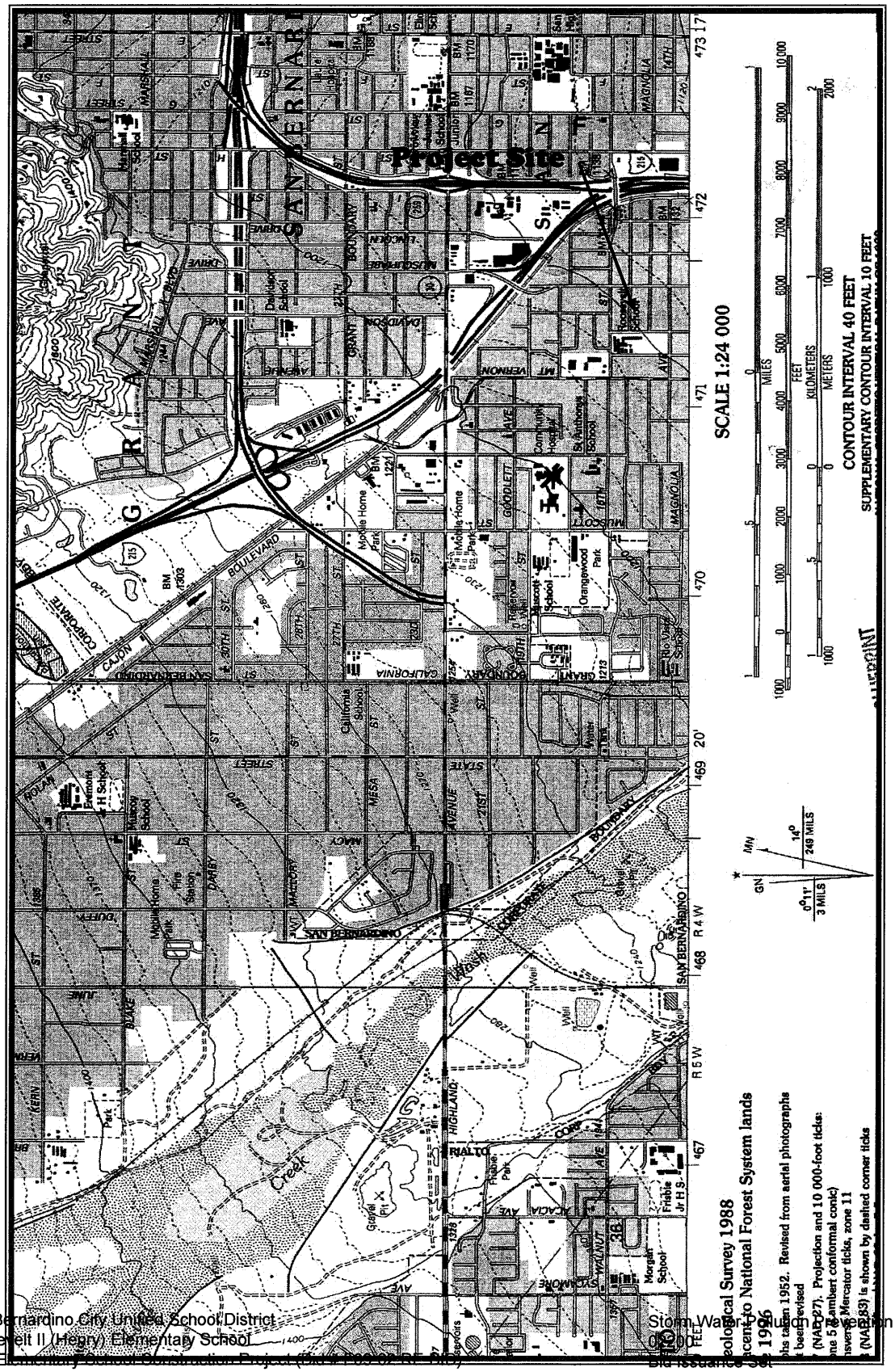
Project Site
SCALE 1:24 000
CONTOUR INTERVAL 40 FEET
SUPPLEMENTARY CONTOUR INTERVAL 10 FEET
Geological Survey 1988
Adjacent to National Forest System lands
1996

Attachment 2

State Water Resources Control Board

NOTICE OF INTENT

TO COMPLY WITH THE TERMS OF THE
GENERAL PERMIT TO DISCHARGE STORM WATER
ASSOCIATED WITH CONSTRUCTION ACTIVITY (WQ ORDER No. 99-08-DWQ)

I. NOI STATUS (SEE INSTRUCTIONS)

MARK ONLY ONE ITEM 1. [X] New Construction 2. [ ] Change of Information for WDID#

II. PROPERTY OWNER

Name	Contact Person		
San Bernardino City Unified School District	Michael Plunkett		
Mailing Address	**Title**		
956 West 9th Street	Facilities Manager		
City	**State**	**Zip**	**Phone**
San Bernardino	CA	92411	(909) 388-6100

Owner Type (*check one*) 1.[ ] Private Individual 2.[ ]Business 3.[ ]Municipal 4.[x]State 5.[ ]Federal 6.[ ]Other

III. DEVELOPER/CONTRACTOR INFORMATION

Developer/Contractor	Contact Person		
Fraco Engineering, Inc.	Maria Fraser, P.E., Civil Engineer		
Mailing Address	**Title**		
12139 Mt.Vernon Avenue, Suite 210	CEO		
City	**State**	**Zip**	**Phone**
Grand Terrace	CA	92313	(909) 824-7230

IV. CONSTRUCTION PROJECT INFORMATION

Site/Project Name	Site Contact Person		
R II- DR. MILDRED D. HENRY S ELEM. SCHOOL-107-199	Jorge Mendez, Assistant Director		
Physical Address/Location	**Latitude**	**Longitude**	**County**
14th street between Mt Vernon Ave and Garner St.	34.16	-117.31	San Bernardino
City (or nearest City)	**Zip**	**Site Phone Number**	**Emergency Phone Number**
San Bernardino	92410	(909) 388-6100	(909) 388-6100

A. Total size of construction site area: 13.45 Acres

B. Total area to be disturbed: 13.45 Acres (% of total 100)

C. Percent of site imperviousness (including rooftops):
Before Construction: 40 %
After Construction: 67 %

D. Tract Number(s): n/a n/a

E. Mile Post Marker: n/a

F. Is the construction site part of a larger common plan of development or sale? [ ] YES [X] NO

G. Name of plan or development: Roosevelt II

H. Construction commencement date: 05 / 26 / 10

I. % of site to be mass graded: 100% der

J. Projected construction dates:
Complete grading: 07 / / 10 Complete project: 07 / / 11

K. Type of Construction (Check all that apply):
1. [ ] Residential 2. [ ] Commercial 3. [ ] Industrial 4. [ ] Reconstruction 5. [ ] Transportation
6. [ ] Utility Description: _____ 7. [X] Other (Please List): School Facility

V. BILLING INFORMATION

SEND BILL TO:	Name	Contact Person	
[X] OWNER (as in II. above)	San Bernardino City Unified School District	Jorge C. Mendez	
[ ] DEVELOPER (as in III. above)	Mailing Address 956 West 9th Street	Phone/Fax (909) 388-6100	
[ ] OTHER (enter information at right)	City San Bernardino	State CA	Zip 92411

.. REGULATORY STATUS

A. Has a local agency approved a required erosion/sediment control plan? ☒ YES ☐ NO

Does the erosion/sediment control plan address construction activities such as infrastructure and structures? ☒ YES ☐ NO

Name of local agency: DSA/SBCUSD Phone: (909) 381-1238

B. Is this project or any part thereof, subject to conditions imposed under a CWA Section 404 permit of 401 Water Quality Certification? ☐ YES ☒ No

If yes, provide details: _____

VII. RECEIVING WATER INFORMATION

A. Does the storm water runoff from the construction site discharge to (Check all that apply):

1. ☒ Indirectly to waters of the U.S.
2. ☐ Storm drain system - Enter owner's name: _____
3. ☐ Directly to waters of U.S. (e.g., river, lake, creek, stream, bay, ocean, etc.)

B. Name of receiving water: (river, lake, creek, stream, bay, ocean): _____

VIII. IMPLEMENTATION OF NPDES PERMIT REQUIREMENTS

A. STORM WATER POLLUTION PREVENTION PLAN (SWPPP) (check one)

☒ A SWPPP has been prepared for this facility and is available for review: Date Prepared: 06 / 06 / 08 Date Amended: ___/___/___

☐ A SWPPP will be prepared and ready for review by (enter date): ___/___/___

☐ A tentative schedule has been included in the SWPPP for activities such as grading, street construction, home construction, etc.

B. MONITORING PROGRAM

☒ A monitoring and maintenance schedule has been developed that includes inspection of the construction BMPs before anticipated storm events and after actual storm events and is available for review.

If checked above: A qualified person has been assigned responsibility for pre-storm and post-storm BMP inspections to identify effectiveness and necessary repairs or design changes. ☒ YES ☐ NO

Name: Jorge Mendez, Assistant Director Phone: (909) 388-6100

C. PERMIT COMPLIANCE RESPONSIBILITY

A qualified person has been assigned responsibility to ensure full compliance with the Permit, and to implement all elements of the Storm Water Pollution Prevention Plan including:

1. Preparing an annual compliance evaluation. ☒ YES ☐ NO

Name: Jorge Mendez Phone: (909) 388-6100

2. Eliminating all unauthorized discharges. ☒ YES ☐ NO

IX. VICINITY MAP AND FEE (must show site location in relation to nearest named streets, intersections, etc.)

Have you included a vicinity map with this submittal? ☒ YES ☐ NO

Have you included payment of the annual fee with this submittal? ☒ YES ☐ NO

X. CERTIFICATIONS

"I certify under penalty of law that this document and all attachments were prepared under my direction and supervision in accordance with a system designed to assure that qualified personnel properly gather and evaluate the information submitted. Based on my inquiry of the person or persons who manage the system, or those persons directly responsible for gathering the information, the information submitted is, to the best of my knowledge and belief, true, accurate, and complete. I am aware that there are significant penalties for submitting false information, including the possibility of fine or imprisonment. In addition, I certify that I have read the entire General Permit, including all attachments, and agree to comply with and be bound by all of the provisions, requirements, and prohibitions of the permit, including the development and implementation of a Storm Water Pollution Prevention Plan and a Monitoring Program Plan will be complied with."

Printed Name: JORGE C. MENDEZ

Signature: _____ Date: 5/3/10

Title: ASSISTANT DIRECTOR FACILITIES

NPDES NOTES

ALL CONSTRUCTION ON OFF-SITE OR ON-SITE IMPROVEMENTS SHALL ADHERE TO N.P.D.E.S. (NATIONAL POLLUTION DISCHARGE ELIMINATION SYSTEM) BEST MANAGEMENT PRACTICES (BMP's) TO PREVENT DELETERIOUS MATERIALS OR POLLUTANTS FROM ENTERING THE CITY OR COUNTY STORM DRAIN SYSTEMS.

THE FOLLOWING SHOULD BE ADHERED TO:

1. HANDLE, STORE, AND DISPOSE OF MATERIALS PROPERLY.
2. AVOID EXCAVATION AND GRADING ACTIVITIES DURING WET WEATHER.
3. CONSTRUCT DIVERSION DIKES AND DRAINAGE SWALES AROUND WORKING SITES.
4. COVER STOCKPILES AND EXCAVATED SOIL WITH SECURED TARPS OR PLASTIC SHEETING.
5. DEVELOP AND IMPLEMENT EROSION CONTROL PLANS AND PROVIDE A COPY TO THE ENGINEERING DIVISION, PUBLIC WORKS DEPARTMENT FOR APPROVAL BY THE CITY ENGINEER.
6. CHECK AND REPAIR LEAKING EQUIPMENT AWAY FROM CONSTRUCTION SITE.
7. DESIGNATE A LOCATION AWAY FROM STORM DRAINS FOR REFUELING.
8. WHEN WORKING NEAR CATCH BASINS, COVER AND SEAL EACH BASIN PRIOR TO THE START OF CONSTRUCTION.
9. USE VACCUM WITH ALL CONCRETE SAWING OPERATIONS.
10. NEVER WASH EXCESS MATERIAL FROM AGGREGATE, CONCRETE OR EQUIPMENT ONTO A STREET.
11. CATCH DRIPS FROM PAVER WITH DRIP PANS OR ABSORBENT MATERIAL.
12. CLEAN UP ALL SPILLS USING DRY METHODS.
13. GUTTERS SHALL BE KEPT CLEAN AFTER LEAVING CONSTRUCTION SITE. SWEEP ALL GUTTERS AT THE END OF EACH WORKING DAY.
14. DURING CONSTRUCTION, DUMPSTER(S) SHALL BE ON SITE AT ALL TIMES.
15. CALL 911 IN CASE OF A HAZARDOUS SPILL.
16. KEEP A RUNNING LOG OF ALL ACTIVITIES IN CONNECTION WITH THE STORM WATER POLLUTION PREVENTION PLAN (SWPPP)
17. NAME A PERSON, ON-SITE TO BE RESPONSIBLE FOR COMPLYING WITH SWPPP
18. THE FOLLOWING BMP'S AS OUTLINED IN, BUT NOT LIMITED TO, THE BEST MANAGEMENT PRACTICE HANDBOOK, CALIFORNIA STORMWATER QUALITY TASK FORCE, SACRAMENTO, CALIFORNIA, 1993, OR THE LATEST REVISED EDITION, MAY APPLY DURING THE CONSTRUCTION OF THE PROJECT (ADDITIONAL MEASURES MAY BE REQUIRED IF DEEMED APPROPRIATE BY COUNTY INSPECTORS).

EROSION CONTROL NOTES

1. IN CASE OF EMERGENCY, CALL _____
   WORK: _____
   HOME: _____
   CELL: _____
2. EQUIPMENT AND WORKERS FOR EMERGENCY WORK SHALL BE MADE AVAILABLE AT ALL TIMES DURING THE RAINY SEASON. NECESSARY MATERIALS SHALL BE AVAILABLE ON-SITE AND STOCKPILED AT CONVENIENT LOCATIONS TO FACILITATE RAPID CONSTRUCTION OF TEMPORARY DEVICES WHEN RAIN IS IMMINENT.
3. DEVICES SHALL NOT BE MOVED OR MODIFIED WITHOUT THE APPROVAL OF THE ENGINEERING DEPARTMENT.
4. ALL REMOVABLE PROTECTIVE DEVICES SHOWN SHALL BE IN PLACE AT THE END OF EACH WORKING DAY WHEN THE 5-DAY RAIN PROBABILITY FORECAST EXCEEDS 40%.
5. AFTER A RAINSTORM, ALL SILT AND DEBRIS SHALL BE REMOVED FROM CHECK BERMS AND DESILTING BASINS, AND THE BASINS PUMPED DRY.
6. GRADED AREAS AROUND THE TRACT PERIMETER MUST DRAIN AWAY FROM THE FACE OF SLOPE AT THE CONCLUSION OF EACH WORKING DAY.
7. THE CONTRACTOR SHALL BE RESPONSIBLE AND TAKE NECESSARY PRECAUTIONS TO PREVENT PUBLIC TRESPASS ONTO AREAS WHERE IMPOUNDED WATER CREATES A HAZARDOUS CONDITION.
8. SANDBAG LAYOUT SHALL BE INSTALLED AS SHOWN PER PLAN OR AS DIRECTED BY THE CITY INSPECTOR.

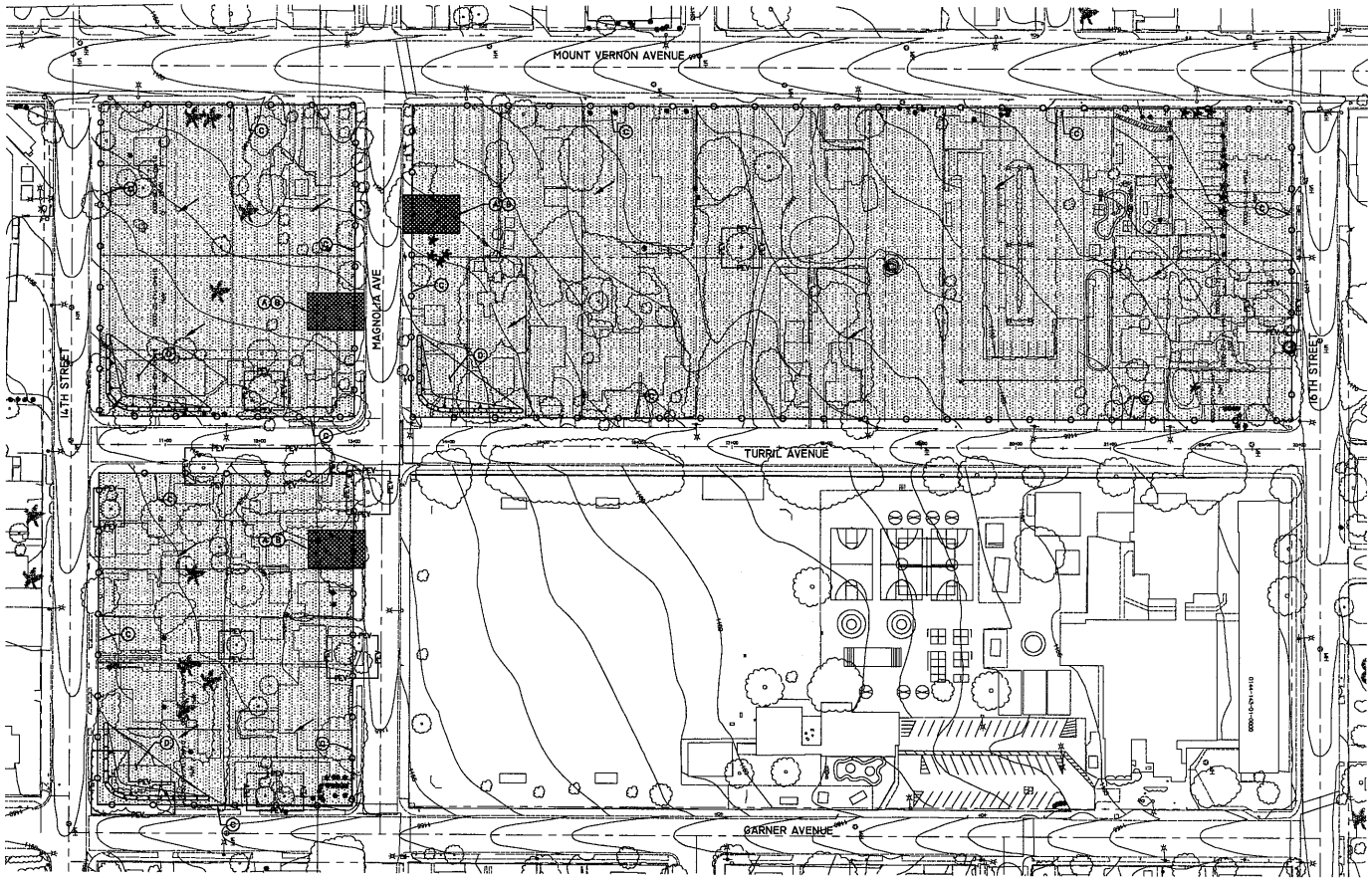

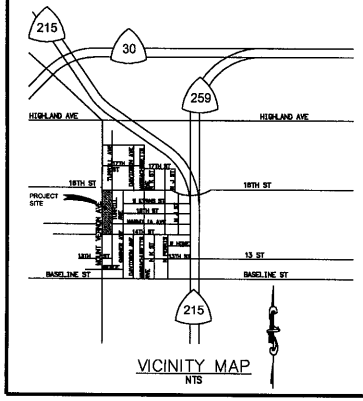

VICINITY MAP
NTS

GRAPHIC SCALE
(IN FEET)
1 inch = 80 ft.

CONSTRUCTION NOTES:

(A) CONSTRUCT EROSION CONTROL MEASURES PER DETAIL "A" AND SPECIFICATIONS ON SHEET SW-1B
(B) CONSTRUCT EROSION CONTROL MEASURES PER DETAIL "B" AND SPECIFICATIONS ON SHEET SW-1B
(C) CONSTRUCT EROSION CONTROL MEASURES PER DETAIL "C" AND SPECIFICATIONS ON SHEET SW-1B
(D) CONSTRUCT TEMPORARY DETENTION BASIN 2' DEEP MAX. WITH SAND BAG BARRIER PER DETAIL "D" ON SHEET SW-1B

LEGEND

- TEMPORARY GRAVEL CONSTRUCTION ENTRANCE/EXIT WITH TIRE WASH
- AREAS OF SOIL DISTURBANCE THAT WILL BE EXPOSED DURING THE RAINY SEASON PRIOR TO THE INSTALLATION OF CONCRETE/ASPHALT
- AREAS OF SOIL DISTURBANCE THAT WILL BE STABILIZED DURING THE RAINY SEASON WITH GORILLA-SHOT SOIL STABILIZER AND DUST CONTROL AGENT
- SANDBAG BARRIER
- SILT FENCE
- DIRECTION OF FLOW
- —PEV— EC-2 PRESERVATION OF EXISTING VEGETATION

TOPOGRAPHY SOURCE

FIELD SURVEY: AUGUST 2005
BY: AERO TECH SURVEYS, RIVERSIDE, CA

SOILS ENGINEER

CONVERSE CONSULTANTS
10391 CORPORATE DRIVE
REDLANDS, CA 92374
PHONE: (909) 796-0544
FAX: (900) 796-7875
ATTN: HASHMI S. E. QUAZI

ASSESSOR'S PARCEL NO.

0139-067-001 THRU 021
0139-082-001 THRU 018

OWNER / APPLICANT

SAN BERNARDINO CITY UNIFIED SCHOOL DISTRICT
777 NORTH F STREET
SAN BERNARDINO, CA 92410
(909) 381-1100

Underground Service Alert
CALL BEFORE YOU DIG
Call: TOLL FREE
1-800
227-2600
TWO WORKING DAYS BEFORE YOU DIG

Fraco Enterprises Inc
Engineering and Construction Services
12139 MOUNT VERNON AVENUE, SUITE 210
GRAND TERRACE, CA 92313
TEL (909) 824-7230 FAX (909) 824-7385

CITY OF SAN BERNARDINO

ROOSEVELT II ELEMENTARY SCHOOL
SWPPP EXHIBIT
(FOR DEMO PURPOSES ONLY)

DRAWN BY:	SM
CHECKED BY:	MIF
SHEET NO.	SW-1A

Storm Water Pollution Prevention Plan
Bid Issuance Set
Page 89 of 345

San Bernardino City Unified School District
New Elementary School Construction Project (Bid # F09-02 RE-BID)

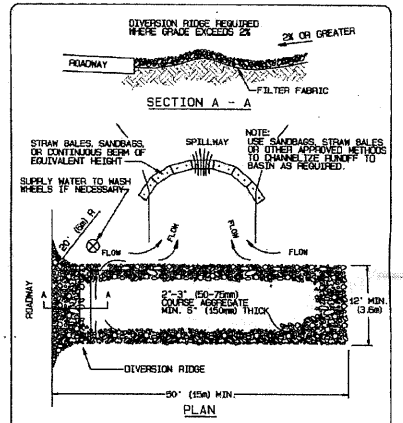

NOTES:

1. THE ENTRANCE SHALL BE MAINTAINED IN A CONDITION THAT WILL PREVENT TRACKING OR FLOWING OF SEDIMENT ONTO PUBLIC RIGHT-OF-WAYS. THIS MAY REQUIRE TOP DRESSING, REPAIR AND/OR CLEAN OUT OF ANY MEASURES USED TO TRAP SEDIMENT.
2. WHEN NECESSARY, WHEELS SHALL BE CLEANED PRIOR TO ENTRANCE ONTO PUBLIC RIGHT-OF-WAY.
3. WHEN WASHING IS REQUIRED, IT SHALL BE DONE ON AN AREA STABILIZED WITH CRUSHED STONE THAT DRAINS INTO AN APPROVED SEDIMENT TRAP OR SEDIMENT BASIN.

GRAVEL CONSTRUCTION ENTRANCE/EXIT

EROSION CONTROL DETAIL "A" (TR-I)

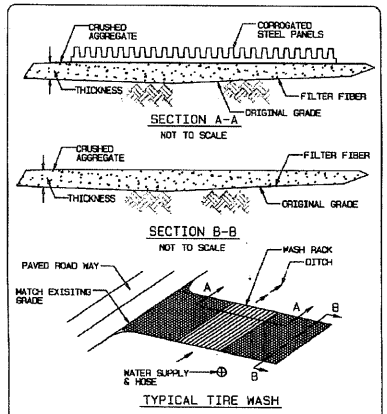

NOTES:

1. MANY DESIGNS CAN BE FIELD FABRICATED OR FABRICATED UNITS MAY BE USED.
2. DITCH TO CARRY RUNOFF TO A SEDIMENT TRAPPING DEVICE.
3. CRUSHED AGGREGATE GREATER THAN 75 MM (3 IN) BUT SMALLER THAN 150 MM (6 IN)
4. THICKNESS BE 300 MM (12 IN) MIN. UNLESS OTHERWISE SPECIFIED BY A SOILS ENGINEER

ENTRANCE/OUTLET TIRE WASH

EROSION CONTROL DETAIL "B" (TC-3)

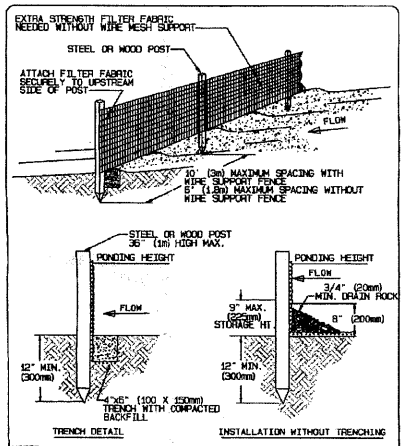

NOTES:

1. SILT FENCE SHALL BE PLACED ON SLOPE CONTOURS TO MAXIMIZE PONDING EFFICIENCY.
2. INSPECT AND REPAIR FENCE AFTER EACH STORM EVENT AND REMOVE SEDIMENT WHEN NECESSARY 9" (225mm) MAXIMUM RECOMMENDED STORAGE HEIGHT.
3. REMOVED SEDIMENT SHALL BE DEPOSITED TO AN AREA THAT WILL NOT CONTRIBUTE SEDIMENT OFF-SITE AND CAN BE PERMANENTLY STABILIZED.

SILT FENCE

EROSION CONTROL DETAIL "C" (SE-I)

CONSTRUCTION SPECIFICATIONS

- THE AGGREGATE SIZE FOR CONSTRUCTION OF THE PAD SHALL BE 2-3 INCH (51-76MM) STONE. PLACE THE GRAVEL TO THE SPECIFIC GRADE AND DIMENSIONS SHOWN ON THE PLANS, AND SMOOTH IT.
- THE THICKNESS OF THE PAD SHALL NOT BE LESS THAN 6 INCHES (0.2M). USE GEOTEXTILE FABRICS, IF NECESSARY, TO IMPROVE STABILITY OF THE FOUNDATION IN LOCATIONS SUBJECT TO SEEPAGE OR HIGH WATER TABLE.
- THE WIDTH OF THE PAD SHALL NOT BE LESS THAN THE FULL WIDTH OF ALL POINTS OF INGRESS OR EGRESS AND IN ANY CASE SHALL NOT BE LESS THAN 12 FEET (3.6M) WIDE.
- THE LENGTH OF THE PAD SHALL BE AS REQUIRED, BUT NOT LESS THAN 50 FEET (15.2M).
- LOCATE CONSTRUCTION ENTRANCES AND EXITS TO LIMIT THE SEDIMENT LEAVING THE SITE AND TO PROVIDE FOR MAXIMUM UTILITY BY ALL CONSTRUCTION VEHICLES. AVOID ENTRANCES WHICH HAVE STEEP GRADES AND ENTRANCES AT CURVES IN PUBLIC ROADS.
- THE ENTRANCE SHALL BE MAINTAINED IN A CONDITION THAT WILL PREVENT TRACKING OR FLOWING OF SEDIMENT ONTO PUBLIC RIGHT-OF-WAY. THIS MAY REQUIRE PERIODIC TOP DRESSING WITH ADDITIONAL STONE AS CONDITIONS DEMAND, AND REPAIR AND/OR MAINTENANCE OF ANY MEASURES USED TO TRAP SEDIMENT.
- ALL SEDIMENT SPILLED, DROPPED, WASHED OR TRACKED ONTO PUBLIC RIGHT-OF-WAY SHALL BE REMOVED IMMEDIATELY.
- PROVIDE DRAINAGE TO CARRY WATER TO A SEDIMENT TRAP OR OTHER SUITABLE OUTLET.
- WHEN NECESSARY, WHEELS SHALL BE CLEANED TO REMOVE SEDIMENT PRIOR TO ENTRANCE ONTO PUBLIC RIGHT-OF-WAY. WHEN WASHING IS REQUIRED, IT SHALL BE DONE ON AN AREA STABILIZED WITH CRUSHED STONE THAT DRAINS INTO AN APPROVED SEDIMENT TRAP OR SEDIMENT BASIN.
- ALL SEDIMENT SHALL BE PREVENTED FROM ENTERING ANY STORM DRAIN, DITCH OR WATERCOURSE THROUGH USE OF GRAVEL, BAGS, GRAVEL, STRAW BALES, OR OTHER APPROVED METHODS.

INSPECTION AND MAINTENANCE

- MAINTAIN THE GRAVEL PAD IN A CONDITION TO PREVENT MUD OR SEDIMENT FROM LEAVING THE CONSTRUCTION SITE.
- REPLACE GRAVEL MATERIAL WHEN SURFACE VOIDS ARE VISIBLE.
- AFTER EACH RAINFALL, INSPECT ANY STRUCTURE USED TO TRAP SEDIMENT AND CLEAN IT OUT AS NECESSARY.
- IMMEDIATELY REMOVE ALL OBJECTIONABLE MATERIALS SPILLED, WASHED, OR TRACKED ONTO PUBLIC ROADWAYS. REMOVE ALL SEDIMENT DEPOSITED ON PAVED ROADWAYS WITHIN 24 HOURS.

CONSTRUCTION SPECIFICATIONS

- INCORPORATE WITH A STABILIZED CONSTRUCTION ENTRANCE/EXIT. SEE DETAILS ON "STABILIZED CONSTRUCTION/EXIT".
- CONSTRUCT ON LEVEL GROUND WHEN POSSIBLE, ON A PAD OF COARSE AGGREGATE, GREATER THAN 75 MM (3 INCH) BUT SMALLER THAN 150 MM (6 INCH).
- WASH RACK SHALL BE DESIGNED AND CONSTRUCTED/MANUFACTURED FOR ANTICIPATED TRAFFIC LOADS.
- PROVIDE A DRAINAGE DITCH THAT WILL CONVEY THE RUNOFF FROM THE WASH AREA TO A SEDIMENT SUMP DEVICE. THE DRAINAGE DITCH SHALL BE OF SUFFICIENT GRADE, WIDTH, AND DEPTH TO CARRY THE WASH RUNOFF.
- REQUIRE THAT ALL EMPLOYEES, SUBCONTRACTORS, AND OTHERS THAT LEAVE THE SITE WITH MUD-CAKED TIRES AND/OR UNDERCARRIAGES USE THE WASH FACILITY.
- CONSTRUCTED/MANUFACTURED STEEL-RIBBED PLATES MAT BE USED IN LIEU OF ROCK.

INSPECTION AND MAINTENANCE

- REMOVE ACCUMULATED SEDIMENT IN WASH RACK AND/OR SEDIMENT SUMP TO MAINTAIN SYSTEM PERFORMANCE.
- INSPECT ROUTINELY FOR DAMAGE AND REPAIR AS NEEDED.

CONSTRUCTION SPECIFICATIONS

TYPICAL SILT FENCE SPECIFICATIONS WERE WRITTEN 25 YEARS AGO AND HAVE CHANGED LITTLE SINCE. SOME STATES HAVE RECOGNIZED SOME OF THE INHERENT PROBLEMS, SUCH AS INADEQUATE TRENCH DEPTH, AND IMPLEMENTED MINOR CHANGES TO IMPROVE EFFICACY. THE 25 YEAR-OLD SPECIFICATIONS, REFERRED TO AS THE TRENCHING METHOD, HAVE NEVER BEEN TESTED FOR EFFICACY AND PROVEN WORTHWHILE. A TRENCHER WAS SIMPLY THE ONLY PIECE OF EQUIPMENT AVAILABLE AT THE TIME CAPABLE OF SECURING THE FABRIC INTO THE SOIL, REGARDLESS OF EFFICACY.

TODAY, MANY CONTRACTORS JUST OPEN A FURROW WITH A BLADE AND BACKFILL ONTO THE FABRIC WITH THE CRUMBS. LOOSE SOIL, BOTH FROM THE TRENCHER OR THE BLADE, ABSORBS WATER QUICKLY AND BECOMES SATURATED, EASILY WASHING OUT UNDER THE FABRIC.

- THE SOIL SHOULD BE SLICED AND THE FABRIC MECHANICALLY INSTALLED INTO THE SOIL.
- THE HEIGHT OF A SILT FENCE SHALL NOT EXCEED 36 INCHES (0.9M). STORAGE HEIGHT AND PONDING HEIGHT SHALL NEVER EXCEED 18 INCHES (0.5M).
- TO MINIMIZE EROSION, INSTALL SILT FENCE AT THE HEAD OF A SLOPE TO SLOW VELOCITY AND TO CREATE A LARGE STORAGE AREA.
- THE FENCE LINE SHALL FOLLOW THE CONTOUR AS CLOSELY AS POSSIBLE.
- THE END OF THE FENCE SHOULD BE TURNED UPHILL.
- STEEL SUPPORT POSTS SHOULD BE UTILIZED, PROPERLY SPACED AND DRIVEN INTO COMPACTED SOIL.
- POST SPACING SHALL NOT EXCEED 6 FEET (1.8M).
- THE FILTER FABRIC IS STAPLED OR WIRED DIRECTLY TO THE POSTS. FILTER FABRIC SHALL NOT BE STAPLED TO EXISTING TREES.
- FABRIC SHOULD BE ATTACHED TO THE POSTS WITH THREE DIAGONAL TIES.
- SILT FENCES PLACED AT THE TOE OF A SLOPE SHALL BE SET AT LEAST 6 FEET (1.8M) FROM THE TOE IN ORDER TO INCREASE PONDING VOLUME.

INSPECTION AND MAINTENANCE

- SILT FENCES AND FILTER BARRIERS SHALL BE INSPECTED WEEKLY AFTER EACH SIGNIFICANT STORM (1 INCH) (25.4 MM) IN 24 HOURS. ANY REQUIRED REPAIRS SHALL BE MADE IMMEDIATELY.
- SEDIMENT SHOULD BE REMOVED WHEN IT REACHES 1/3 HEIGHT OF THE FENCE OR 9 INCHES (0.3M) MAXIMUM.
- THE REMOVED SEDIMENT SHALL CONFORM TO THE EXISTING GRADE AND BE VEGETATED OR OTHERWISE STABILIZED.
- SILT FENCES SHALL BE REMOVED WHEN THEY HAVE SERVED THEIR USEFUL PURPOSE, BUT NOT BEFORE THE UP SLOPE AREA HAS BEEN PERMANENTLY STABILIZED AND ANY SEDIMENT STORED BEHIND THE SILT FENCE HAS BEEN REMOVED.

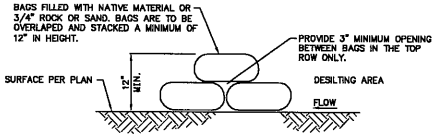

DETAIL "D"

TYPICAL SANDBAG BARRIER
(SEE BMP SE-8)
NTS

Underground Service Alert
CALL BEFORE YOU DIG
Call: TOLL FREE
1-800
227-2600
TWO WORKING DAYS BEFORE YOU DIG

Raco Enterprises Inc
Engineering and Construction Services
12139 MOUNT VERNON AVENUE, SUITE 210
GRAND TERRACE, CA 92313
TEL (909) 824-7230 FAX (909) 824-7385

CITY OF SAN BERNARDINO

ROOSEVELT II ELEMENTARY SCHOOL
SWPPP EXHIBIT
(FOR DEMO PURPOSES ONLY)

DRAWN BY:	SM
CHECKED BY:	MIF
SHEET NO.	SW-1B

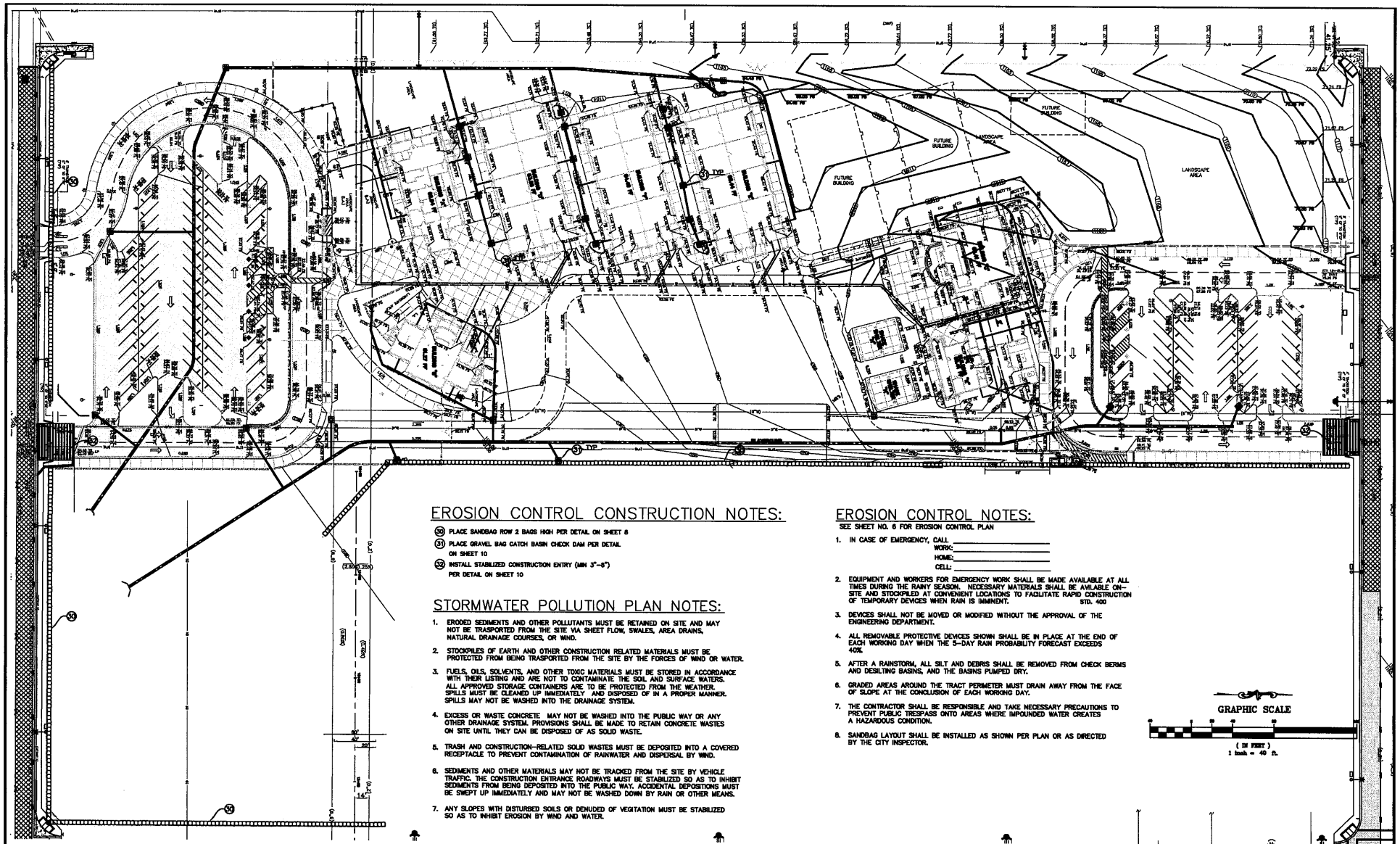

EROSION CONTROL CONSTRUCTION NOTES:

(30) PLACE SANDBAG ROW 2 BAGS HIGH PER DETAIL ON SHEET 8

(31) PLACE GRAVEL BAG CATCH BASIN CHECK DAM PER DETAIL ON SHEET 10

(32) INSTALL STABILIZED CONSTRUCTION ENTRY (MIN 3"-8") PER DETAIL ON SHEET 10

STORMWATER POLLUTION PLAN NOTES:

1. ERODED SEDIMENTS AND OTHER POLLUTANTS MUST BE RETAINED ON SITE AND MAY NOT BE TRASPORTED FROM THE SITE VIA SHEET FLOW, SWALES, AREA DRAINS, NATURAL DRAINAGE COURSES, OR WIND.
2. STOCKPILES OF EARTH AND OTHER CONSTRUCTION RELATED MATERIALS MUST BE PROTECTED FROM BEING TRASPORTED FROM THE SITE BY THE FORCES OF WIND OR WATER.
3. FUELS, OILS, SOLVENTS, AND OTHER TOXIC MATERIALS MUST BE STORED IN ACCORDANCE WITH THEIR LISTING AND ARE NOT TO CONTAMINATE THE SOIL AND SURFACE WATERS. ALL APPROVED STORAGE CONTAINERS ARE TO BE PROTECTED FROM THE WEATHER. SPILLS MUST BE CLEANED UP IMMEDIATELY AND DISPOSED OF IN A PROPER MANNER. SPILLS MAY NOT BE WASHED INTO THE DRAINAGE SYSTEM.
4. EXCESS OR WASTE CONCRETE MAY NOT BE WASHED INTO THE PUBLIC WAY OR ANY OTHER DRAINAGE SYSTEM. PROVISIONS SHALL BE MADE TO RETAIN CONCRETE WASTES ON SITE UNTIL THEY CAN BE DISPOSED OF AS SOLID WASTE.
5. TRASH AND CONSTRUCTION-RELATED SOLID WASTES MUST BE DEPOSITED INTO A COVERED RECEPTACLE TO PREVENT CONTAMINATION OF RAINWATER AND DISPERSAL BY WIND.
6. SEDIMENTS AND OTHER MATERIALS MAY NOT BE TRACKED FROM THE SITE BY VEHICLE TRAFFIC. THE CONSTRUCTION ENTRANCE ROADWAYS MUST BE STABILIZED SO AS TO INHIBIT SEDIMENTS FROM BEING DEPOSITED INTO THE PUBLIC WAY. ACCIDENTAL DEPOSITIONS MUST BE SWEPT UP IMMEDIATELY AND MAY NOT BE WASHED DOWN BY RAIN OR OTHER MEANS.
7. ANY SLOPES WITH DISTURBED SOILS OR DENUDED OF VEGITATION MUST BE STABILIZED SO AS TO INHIBIT EROSION BY WIND AND WATER.

EROSION CONTROL NOTES:

SEE SHEET NO. 6 FOR EROSION CONTROL PLAN

1. IN CASE OF EMERGENCY, CALL _____
   WORK: _____
   HOME: _____
   CELL: _____
2. EQUIPMENT AND WORKERS FOR EMERGENCY WORK SHALL BE MADE AVAILABLE AT ALL TIMES DURING THE RAINY SEASON. NECESSARY MATERIALS SHALL BE AVILABLE ON-SITE AND STOCKPILED AT CONVENIENT LOCATIONS TO FACILITATE RAPID CONSTRUCTION OF TEMPORARY DEVICES WHEN RAIN IS IMMINENT. STD. 400
3. DEVICES SHALL NOT BE MOVED OR MODIFIED WITHOUT THE APPROVAL OF THE ENGINEERING DEPARTMENT.
4. ALL REMOVABLE PROTECTIVE DEVICES SHOWN SHALL BE IN PLACE AT THE END OF EACH WORKING DAY WHEN THE 5-DAY RAIN PROBABILITY FORECAST EXCEEDS 40%.
5. AFTER A RAINSTORM, ALL SILT AND DEBRIS SHALL BE REMOVED FROM CHECK BERMS AND DESILTING BASINS, AND THE BASINS PUMPED DRY.
6. GRADED AREAS AROUND THE TRACT PERIMETER MUST DRAIN AWAY FROM THE FACE OF SLOPE AT THE CONCLUSION OF EACH WORKING DAY.
7. THE CONTRACTOR SHALL BE RESPONSIBLE AND TAKE NECESSARY PRECAUTIONS TO PREVENT PUBLIC TRESPASS ONTO AREAS WHERE IMPOUNDED WATER CREATES A HAZARDOUS CONDITION.
8. SANDBAG LAYOUT SHALL BE INSTALLED AS SHOWN PER PLAN OR AS DIRECTED BY THE CITY INSPECTOR.

E0701319

Underground Service Alert
Call: TOLL FREE
1-800
227-2600
TWO WORKING DAYS BEFORE YOU DIG

MARK	REVISIONS	BY	APPR.	DATE

BENCHMARK = CITY OF SAN BERNARDINO BM# G1-41.
ELEVATION 1158.753 FT.

BRASS DISK CSB G1-41. 41.25 FT. EAST & 30.0 FT SOUTH OF THE CENTERLINE P.J. OF MT. VERNON & 14TH ST. ±9.75 FT. SOUTH OF THE SOUTH CURBLINE OF 14TH ST. 9.25 FT. EAST OF THE EAST CURBLINE OF MT.VERNON AVE. ± 2.0 FT EAST OF THE NORTH/SOUTH SIDEWALK ABOUT 0.2 FEET LOWER THEN THE PAVEMENT.

Fraco Enterprises Inc
Engineering and Construction Services
12130 MOUNT VERNON AVENUE, SUITE 210
GRAND TERRACE, CA 92313
TEL (909) 824-7230 FAX (909) 824-7385

REGISTERED PROFESSIONAL ENGINEER
MARIA L. FRASER
No. 56005
EXP. DATE 12/31/10
CIVIL
STATE OF CALIFORNIA

PREPARED UNDER THE DIRECT SUPERVISION OF:
MARIA L. FRASER
RCE NO. 56005
EXP. 12/31/2010
DATE

DESIGNED BY: JRN, SM
DRAWN BY: JRN, SM
CHECKED BY: MIF

CITY OF SAN BERNARDINO
DEPARTMENT OF PUBLIC WORKS
APPROVED BY:
ROBERT G. EBERHERDEZ, P.E.
CITY ENGINEER
RCE NO. 54831, EXP. 6/30/2009
DATE

CITY OF SAN BERNARDINO
DEVELOPMENT SERVICES--PUBLIC WORKS/ENGINEERING

PRECISE GRADING PLAN
ROOSEVELT II ELEMENTARY SCHOOL
EROSION CONTROL PLAN

DRAWING NO. 12343
SHEET 9 OF 10 SHEETS

FOR CITY USE ONLY: FILE NO. W.O. NO.

San Bernardino City Unified School District
Roosevelt II (Henry) Elementary School
New Elementary School Construction Project (Bid # F09-02 RE-BID)

Storm Water Pollution Prevention Plan
Sheet 9 of 10
Bid Instructions Set
Bid Set Index
Page 9 of 10

	A	B	C
1	**Sediment Risk Factor Worksheet**		**Entry**
2	**A) R Factor**		
3	Analyses of data indicated that when factors other than rainfall are held constant, soil loss is directly proportional to a rainfall factor composed of total storm kinetic energy (E) times the maximum 30-min intensity (I30) (Wischmeier and Smith, 1958). The numerical value of R is the average annual sum of EI30 for storm events during a rainfall record of at least 22 years. "Isoerodent" maps were developed based on R values calculated for more than 1000 locations in the Western U.S. Refer to the link below to determine the R factor for the project site.		
4	http://cfpub.epa.gov/npdes/stormwater/LEW/lewCalculator.cfm		
5	**R Factor Value**		71.44
6			
7	The soil-erodibility factor K represents: (1) susceptibility of soil or surface material to erosion, (2) transportability of the sediment, and (3) the amount and rate of runoff given a particular rainfall input, as measured under a standard condition. Fine-textured soils that are high in clay have low K values (about 0.05 to 0.15) because the particles are resistant to detachment. Coarse-textured soils, such as sandy soils, also have low K values (about 0.05 to 0.2) because of high infiltration resulting in low runoff even though these particles are easily detached. Medium-textured soils, such as a silt loam, have moderate K values (about 0.25 to 0.45) because they are moderately susceptible to particle detachment and they produce runoff at moderate rates. Soils having a high silt content are especially susceptible to erosion and have high K values, which can exceed 0.45 and can be as large as 0.65. Silt-size particles are easily detached and tend to crust, producing high rates and large volumes of runoff. Use Site-specific data must be submitted.		
8	Site-specific K factor guidance		
9	**K Factor Value**		0.3
10	**C) LS Factor (weighted average, by area, for all slopes)**		
11	The effect of topography on erosion is accounted for by the LS factor, which combines the effects of a hillslope-length factor, L, and a hillslope-gradient factor, S. Generally speaking, as hillslope length and/or hillslope gradient increase, soil loss increases. As hillslope length increases, total soil loss and soil loss per unit area increase due to the progressive accumulation of runoff in the downslope direction. As the hillslope gradient increases, the velocity and erosivity of runoff increases. Use the LS table located in separate tab of this spreadsheet to determine LS factors. Estimate the weighted LS for the site prior to construction.		
12	LS Table		
13	**LS Factor Value**		0.27
14			
15	**Watershed Erosion Estimate (=RxKxLS) in tons/acre**	5.78664	
16	**Site Sediment Risk Factor**	**Low**	
17	Low Sediment Risk: < 15 tons/acre		
18	Medium Sediment Risk: >=15 and <75 tons/acre		
19	High Sediment Risk: >= 75 tons/acre		
20			

Combined Risk Level Matrix

Receiving Water Risk	Sediment Risk: Low	Sediment Risk: Medium	Sediment Risk: High
Low	Level 1	Level 2	
High	Level 2		Level 3

Project Sediment Risk: Low

Project RW Risk: Low

Project Combined Risk: Level 1

U.S. ENVIRONMENTAL PROTECTION AGENCY

National Pollutant Discharge Elimination System (NPDES)

Rainfall Erosivity Factor Calculator for Small Construction Sites

Facility Information

Facility Name: Dr. Mildred D Henry Elementary School
Start Date: 12/07/2011
End Date: 01/09/2013
Address: 777 North F Street, San Bernardino,, California 92410
Latitude: 34.1134851
Longitude: -117.2964202

Erosivity Index Calculator Results

AN EROSIVITY INDEX VALUE OF 71.44 HAS BEEN DETERMINED FOR THE CONSTRUCTION PERIOD OF **12/07/2011 - 01/09/2013.**

A rainfall erosivity factor of 5.0 or greater has been calculated for your site and period of construction. You do not qualify for a waiver from NPDES permitting requirements.

Start Over

Sign Up for NPDES News
Get Acrobat Reader
The documents on this site are best viewed with Acrobat 8.0

(Soils Report Page 5 : Sandy Silt, Sand and clayey sand (BH7, BH8)

Soil Erodibility Factor (K)

The K factor can be determined by using the nomograph method, which requires that a particle size analysis (ASTM D-422) done to determine the percentages of sand, very fine sand, silt and clay. Use the figure below to determine appropriate value.

PER SOILS DRAWING B-1

	% SAND	% Silt
BORE BH-1	64.9	35.1
BH-4	57.0	43.0
+		
2		
Ave =	60.95 % sand	39.05 % silt
	≈61	≈ 39.

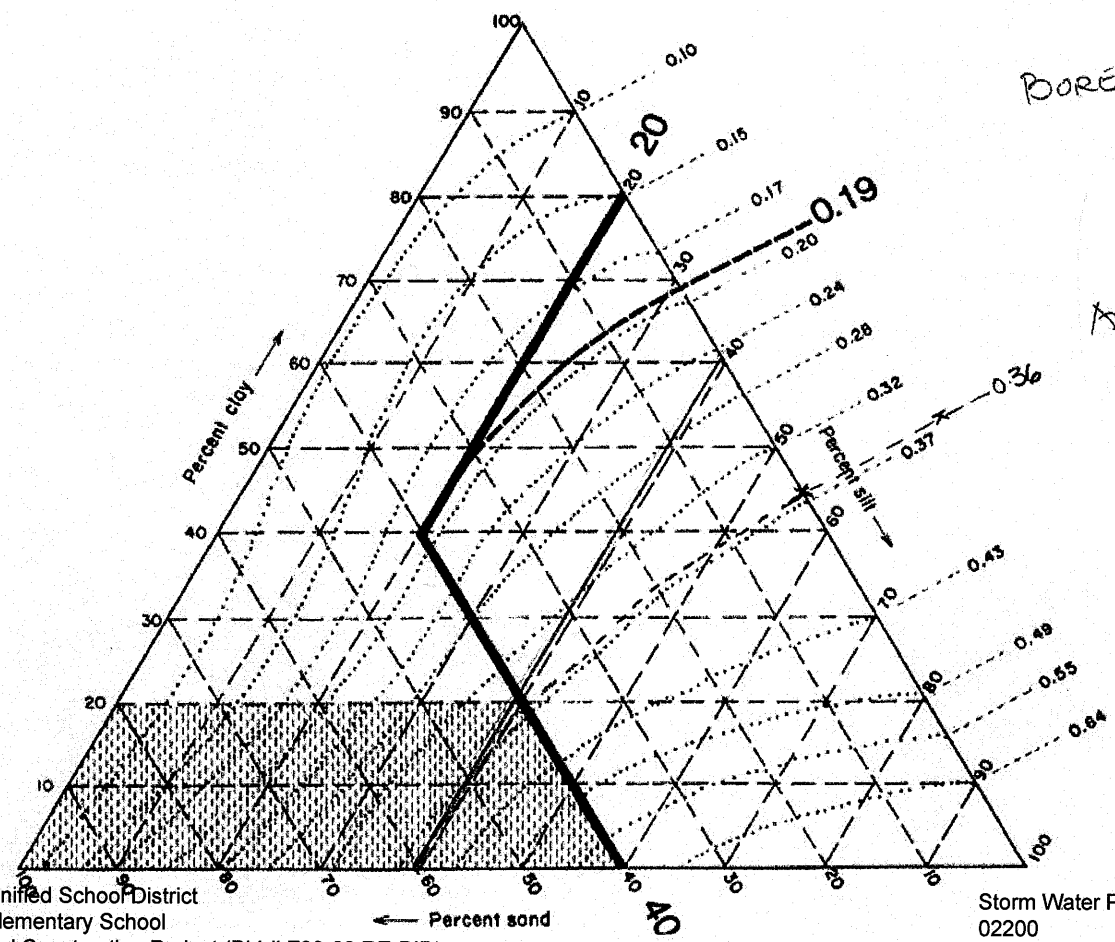

FIL

Sheet Flow Length (ft)	Average Watershed Slope (%)							
	0.2	0.5	1.0	2.0	3.0	4.0	5.0	6.0
<3	0.05	0.07	0.09	0.13	0.17	0.20	0.23	0.26
6	0.05	0.07	0.09	0.13	0.17	0.20	0.23	0.26
9	0.05	0.07	0.09	0.13	0.17	0.20	0.23	0.26
12	0.05	0.07	0.09	0.13	0.17	0.20	0.23	0.26
15	0.05	0.07	0.09	0.13	0.17	0.20	0.23	0.26
25	0.05	0.07	0.10	0.16	0.21	0.26	0.31	0.36
50	0.05	0.08	0.13	0.21	0.30	0.38	0.46	0.54
75	0.05	0.08	0.14	0.25	0.36	0.47	0.58	0.69
100	0.05	0.09	0.15	0.28	0.41	0.55	0.68	0.82
150	0.05	0.09	0.17	0.33	0.50	0.68	0.86	1.05
200	0.06	0.10	0.18	0.37	0.57	0.79	1.02	1.25
250	0.06	0.10	0.19	0.40	0.64	0.89	1.16	1.43
300	0.06	0.10	0.20	0.43	0.69	0.98	1.28	1.60
400	0.06	0.11	0.22	0.48	0.80	1.14	1.51	1.90
600	0.06	0.12	0.24	0.56	0.96	1.42	1.91	2.43
800	0.06	0.12	0.26	0.63	1.10	1.65	2.25	2.89
1000	0.06	0.13	0.27	0.69	1.23	1.86	2.55	3.30

LS Factors for Construction Sites. *Table from Renard et. al., 1997.*

2006 CWA SECTION 303(d) LIST OF WATER QUALITY LIMITED SEGMENTS REQUIRING TMDLS

SANTA ANA REGIONAL WATER QUALITY CONTROL BOARD

USEPA APPROVAL DATE: JUNE 28, 2007

REGION	TYPE	NAME	CALWATER WATERSHED	POLLUTANT/STRESSOR	POTENTIAL SOURCES	ESTIMATED SIZE AFFECTED	PROPOSED TMDL COMPLETION
8	B	Anaheim Bay	80111000				
				Dieldrin (tissue)		402 Acres	2019
				This listing was made by USEPA.			
					Source Unknown		
				Nickel		402 Acres	2019
				This listing was made by USEPA.			
					Source Unknown		
				PCBs (Polychlorinated biphenyls) (tissue)		402 Acres	2019
				This listing was made by USEPA.			
					Source Unknown		
				Sediment Toxicity		402 Acres	2019
					Source Unknown		
8	C	Balboa Beach	80114000				
				DDT		1.8 Miles	2019
					Source Unknown		
				Dieldrin		1.8 Miles	2019
					Source Unknown		
				PCBs (Polychlorinated biphenyls)		1.8 Miles	2019
					Source Unknown		
8	L	Big Bear Lake	80171000				
				Copper		2865 Acres	2007
					Resource Extraction		
				Mercury		2865 Acres	2007
					Resource Extraction		
				Metals		2865 Acres	2007
					Resource Extraction		
				Noxious aquatic plants		2865 Acres	2006
					Construction/Land Development		
					Unknown point source		

2006 CWA SECTION 303(d) LIST OF WATER QUALITY LIMITED SEGMENTS REQUIRING TMDLS

SANTA ANA REGIONAL WATER QUALITY CONTROL BOARD

USEPA APPROVAL DATE: JUNE 28, 2007

REGION	TYPE	NAME	CALWATER WATERSHED	POLLUTANT/STRESSOR	POTENTIAL SOURCES	ESTIMATED SIZE AFFECTED	PROPOSED TMDL COMPLETION
				Nutrients		2865 Acres	2006
					Construction/Land Development		
					Snow skiing activities		
				PCBs (Polychlorinated biphenyls)		2865 Acres	2019
					Source Unknown		
				Sedimentation/Siltation		2865 Acres	2006
					Construction/Land Development		
					Snow skiing activities		
					Unknown Nonpoint Source		
8	C	Bolsa Chica State Beach	80111000				
				Copper		2.6 Miles	2019
				This listing was made by USEPA.			
					Source Unknown		
				Nickel		2.6 Miles	2019
				This listing was made by USEPA.			
					Source Unknown		
8	R	Buck Gully Creek	80111000				
				Fecal Coliform		0.3 Miles	2019
				Listing is downstream of Pacific Coast Highway.			
					Source Unknown		
				Total Coliform		0.3 Miles	2019
				Listing is downstream of Pacific Coast Highway.			
					Source Unknown		
8	L	Canyon Lake (Railroad Canyon Reservoir)	80211000				
				Pathogens		453 Acres	2006
					Nonpoint Source		
8	R	Chino Creek Reach 1	80121000				
				Nutrients		7.8 Miles	2019
					Agriculture		
					Dairies		

2006 CWA SECTION 303(d) LIST OF WATER QUALITY LIMITED SEGMENTS REQUIRING TMDLS

SANTA ANA REGIONAL WATER QUALITY CONTROL BOARD

USEPA APPROVAL DATE: JUNE 28, 2007

REGION	TYPE	NAME	CALWATER WATERSHED	POLLUTANT/STRESSOR	POTENTIAL SOURCES	ESTIMATED SIZE AFFECTED		PROPOSED TMDL COMPLETION
8	L	Elsinore, Lake	80231000					
				PCBs (Polychlorinated biphenyls)		2431	Acres	2019
					Source Unknown			
				Unknown Toxicity		2431	Acres	2007
					Unknown Nonpoint Source			
8	L	Fulmor, Lake	80221000					
				Pathogens		4.2	Acres	2019
					Unknown Nonpoint Source			
8	R	Grout Creek	80171000					
				Metals		3.5	Miles	2007
					Unknown Nonpoint Source			
				Nutrients		3.5	Miles	2008
					Unknown Nonpoint Source			
8	C	Huntington Beach State Park	80111000					
				Enterococcus		5.8	Miles	2019
				Impaired 50 yards around drain at Magnolia St.				
					Source Unknown			
				Indicator bacteria		5.8	Miles	2019
				This listing was made by USEPA for 2006. This listing for indicator bacteria applies to the area of the beach at Brookhurst St.				
					Source Unknown			
				PCBs (Polychlorinated biphenyls)		5.8	Miles	2019
					Source Unknown			
8	B	Huntington Harbour	80111000					
				Chlordane		221	Acres	2019
					Source Unknown			
				Copper		221	Acres	2019
				This listing was made by USEPA.				
					Source Unknown			
				Lead		221	Acres	2019
					Source Unknown			

2006 CWA SECTION 303(d) LIST OF WATER QUALITY LIMITED SEGMENTS REQUIRING TMDLS

SANTA ANA REGIONAL WATER QUALITY CONTROL BOARD

USEPA APPROVAL DATE: JUNE 28, 2007

REGION	TYPE	NAME	CALWATER WATERSHED	POLLUTANT/STRESSOR	POTENTIAL SOURCES	ESTIMATED SIZE AFFECTED	PROPOSED TMDL COMPLETION
				Nickel		221 Acres	2019
				This listing was made by USEPA.			
					Source Unknown		
				Pathogens		221 Acres	2019
					Urban Runoff/Storm Sewers		
				PCBs (Polychlorinated biphenyls) (tissue)		221 Acres	2019
				This listing was made by USEPA.			
					Source Unknown		
				Sediment Toxicity		221 Acres	2019
					Source Unknown		
8	R	Knickerbocker Creek	80171000				
				Metals		2 Miles	2007
					Unknown Nonpoint Source		
				Pathogens		2 Miles	2005
				For 2006, pathogens was moved by USEPA from the being addressed list back to the 303(d) list pending completion and USEPA approval of a TMDL.			
					Unknown Nonpoint Source		
8	R	Los Trancos Creek (Crystal Cove Creek)	80111000				
				Fecal Coliform		0.19 Miles	2019
				Listing is downstream of Pacific Coast Highway.			
					Source Unknown		
				Total Coliform		0.19 Miles	2019
				Listing is downstream of Pacific Coast Highway.			
					Source Unknown		
8	R	Lytle Creek	80141000				
				Pathogens		41 Miles	2019
					Unknown Nonpoint Source		
8	R	Mill Creek (Prado Area)	80121000				
				Nutrients		1.6 Miles	2019
					Agriculture		
					Dairies		

2006 CWA SECTION 303(d) LIST OF WATER QUALITY LIMITED SEGMENTS REQUIRING TMDLS

SANTA ANA REGIONAL WATER QUALITY CONTROL BOARD

USEPA APPROVAL DATE: JUNE 28, 2007

REGION	TYPE	NAME	CALWATER WATERSHED	POLLUTANT/STRESSOR	POTENTIAL SOURCES	ESTIMATED SIZE AFFECTED	PROPOSED TMDL COMPLETION
				Total Suspended Solids (TSS)		1.6 Miles	2019
					Dairies		
8	R	Mill Creek Reach 1	80156000				
				Pathogens		12 Miles	2019
					Unknown Nonpoint Source		
8	R	Mill Creek Reach 2	80158000				
				Pathogens		12 Miles	2019
					Unknown Nonpoint Source		
8	R	Mountain Home Creek	80158000				
				Pathogens		3.7 Miles	2019
					Unknown Nonpoint Source		
8	R	Mountain Home Creek, East Fork	80158000				
				Pathogens		5.1 Miles	2019
					Unknown Nonpoint Source		
8	B	Newport Bay, Lower	80114000				
				Chlordane		767 Acres	2019
					Source Unknown		
				Copper		767 Acres	2007
					Source Unknown		
				DDT		767 Acres	2019
					Source Unknown		
				PCBs (Polychlorinated biphenyls)		767 Acres	2019
					Source Unknown		
				Sediment Toxicity		767 Acres	2019
					Source Unknown		

2006 CWA SECTION 303(d) LIST OF WATER QUALITY LIMITED SEGMENTS REQUIRING TMDLS

SANTA ANA REGIONAL WATER QUALITY CONTROL BOARD

USEPA APPROVAL DATE: JUNE 28, 2007

REGION	TYPE	NAME	CALWATER WATERSHED	POLLUTANT/STRESSOR	POTENTIAL SOURCES	ESTIMATED SIZE AFFECTED	PROPOSED TMDL COMPLETION
8	E	Newport Bay, Upper (Ecological Reserve)	80111000				
				Chlordane		653 Acres	2019
					Source Unknown		
				Copper		653 Acres	2007
					Source Unknown		
				DDT		653 Acres	2019
					Source Unknown		
				Metals		653 Acres	2019
					Urban Runoff/Storm Sewers		
				PCBs (Polychlorinated biphenyls)		653 Acres	2019
					Source Unknown		
				Sediment Toxicity		653 Acres	2019
					Source Unknown		
8	R	Peters Canyon Channel	80111000				
				DDT		3 Miles	2019
					Source Unknown		
				Toxaphene		3 Miles	2019
					Source Unknown		
8	L	Prado Park Lake	80121000				
				Nutrients		90 Acres	2019
					Nonpoint Source		
8	R	Rathbone (Rathbun) Creek	80171000				
				Nutrients		4.7 Miles	2008
					Snow skiing activities		
					Unknown Nonpoint Source		

2006 CWA SECTION 303(d) LIST OF WATER QUALITY LIMITED SEGMENTS REQUIRING TMDLS

SANTA ANA REGIONAL WATER QUALITY CONTROL BOARD

USEPA APPROVAL DATE: JUNE 28, 2007

REGION	TYPE	NAME	CALWATER WATERSHED	POLLUTANT/STRESSOR	POTENTIAL SOURCES	ESTIMATED SIZE AFFECTED	PROPOSED TMDL COMPLETION
				Sedimentation/Siltation		4.7 Miles	2006
					Snow skiing activities		
					Unknown Nonpoint Source		
8	B	Rhine Channel	80114000				
				Copper		20 Acres	2019
					Source Unknown		
				Lead		20 Acres	2019
					Source Unknown		
				Mercury		20 Acres	2019
					Source Unknown		
				PCBs (Polychlorinated biphenyls)		20 Acres	2019
					Source Unknown		
				Sediment Toxicity		20 Acres	2019
					Source Unknown		
				Zinc		20 Acres	2019
					Source Unknown		
8	R	San Diego Creek Reach 1	80111000				
				Fecal Coliform		7.8 Miles	2019
					Urban Runoff/Storm Sewers		
					Other Urban Runoff		
				Selenium		7.8 Miles	2007
					Source Unknown		
				Toxaphene		7.8 Miles	2019
					Source Unknown		

2006 CWA SECTION 303(d) LIST OF WATER QUALITY LIMITED SEGMENTS REQUIRING TMDLS

SANTA ANA REGIONAL WATER QUALITY CONTROL BOARD

USEPA APPROVAL DATE: JUNE 28, 2007

REGION	TYPE	NAME	CALWATER WATERSHED	POLLUTANT/STRESSOR	POTENTIAL SOURCES	ESTIMATED SIZE AFFECTED	PROPOSED TMDL COMPLETION
8	R	San Diego Creek Reach 2	80111000				
				Metals		6.3 Miles	2007
					Urban Runoff/Storm Sewers		
8	R	Santa Ana River, Reach 4	80127000				
				Pathogens		14 Miles	2019
					Nonpoint Source		
8	R	Santiago Creek, Reach 4	80112000				
				Salinity/TDS/Chlorides		9.8 Miles	2019
					Source Unknown		
8	C	Seal Beach	80111000				
				Enterococcus		0.53 Miles	2019
				Impaired 50 yards around drain at 1st Street.			
					Source Unknown		
				PCBs (Polychlorinated biphenyls)		0.53 Miles	2019
					Source Unknown		
8	R	Silverado Creek	80112000				
				Pathogens		11 Miles	2019
					Unknown Nonpoint Source		
				Salinity/TDS/Chlorides		11 Miles	2019
					Unknown Nonpoint Source		
8	R	Summit Creek	80171000				
				Nutrients		1.5 Miles	2008
					Construction/Land Development		

2006 CWA SECTION 303(d) LIST OF WATER QUALITY LIMITED SEGMENTS REQUIRING TMDLS

SANTA ANA REGIONAL WATER QUALITY CONTROL BOARD

USEPA APPROVAL DATE: JUNE 28, 2007

REGION	TYPE	NAME	CALWATER WATERSHED	POLLUTANT/STRESSOR	POTENTIAL SOURCES	ESTIMATED SIZE AFFECTED	PROPOSED TMDL COMPLETION

ABBREVIATIONS

REGIONAL WATER QUALITY CONTROL BOARDS

1 North Coast
2 San Francisco Bay
3 Central Coast
4 Los Angeles
5 Central Valley
6 Lahontan
7 Colorado River Basin
8 Santa Ana
9 San Diego

WATER BODY TYPE

B = Bays and Harbors
C = Coastal Shorelines/Beaches
E = Estuaries
L = Lakes/Reserviors
R = Rivers and Streams
S = Saline Lakes
T = Wetlands, Tidal
W= Wetlands, Freshwater

CALWATER WATERSHED

"Calwater Watershed" is the State Water Resources Control Board hydrological subunit area or an even smaller area delineation.

GROUP A PESTICIDES OR CHEM A

aldrin, dieldrin, chlordane, endrin, heptachlor, heptachlor epoxide, hexachlorocyclohexane (including lindane), endosulfan, and toxaphene

APPENDIX C

SWPPP Amendment Log

RECORD OF AMENDMENTS TO SWPPP

Project Name: Dr. Mildred Henry Elementary School , DSA 03-107199

Project Number ID **836C358225**

Amendment No.	**Date**	**Brief Description of Amendment, include section and page number**	**Prepared and Approved By**
			Name: QSD#
			Name: QSD#
			Name: QSD#
			Name: QSD#
			Name: QSD#
			Name: QSD#
			Name: QSD#
			Name: QSD#
			Name: QSD#

MEMORANDUM OF AMMENDMENT TO SWPPP
FOR
Dr. Mildred D. Henry Elementary School (A.KA. RII)

DATE: _____

TO : ALL HOLDERS OF THIS SWPPP FOR THE ABOVE REFERENCED PROJECT :

PLEASE REMOVE THE APPROPRIATE PAGES IN YOUR COPY OF THE SWPPP FOR _____AND REPLACE THEM WITH THIS AMENDMENT (S)

ALL AMENDMENT TO THE SWPPP MUST BE SUBMITTED TO THE QUALIFIED SWPPP PRACTITIONER (QSP) RESPONSIBLE FOR THE IMPLEMENTATION OF THE SWPPP.

AMENDMENTS WILL BE FILED WITH THIS PLAN :

AMENDMENT NUMBER_____

DATE OF AMENDMENTS_____

REMOVE PAGES INSERT PAGES	INSERT PAGES
(OLD PAGE NUMBERS)	(NEW NUMBERS)
_____	_____
_____	_____
_____	_____
_____	_____
_____	_____
_____	_____

APPENDIX D

Submitted Changes to the Permit Registration Documents (PRDs), (due to ownership or acreage)

APPENDIX E

Construction Schedule

Construction Schedule

Estimated Construction Start December 2011
Estimated Construction Finish: January 2013

Mobilization of equipment and Materials Begin in December 2011
Install Stabilized Construction Entrance: December 2011

Submit annual rainy season implementation: October 2012
Prepared soiled stabilization and sediment Control Stabilization plan prior to rainy season; submit to the owner by October 2012.

Start implementation of sediment control BMP's October 2012. Continue to implement and maintain temporary BMP's through the rainy season.

Rainy Season begins October 1st 2012

Continue to apply soil stabilization and sediment controls as needed during construction from October 2012 to the end of construction or April 2013 which ever comes first.

CONTRACTOR SHALL INSERT A SUPPLEMENTAL CONSTRUCTION SCHEDULE INDICATING IN DETAIL THE ESTIMATED SEQUENCE OF CONSTRCUTION FROM MOBILIZATION TO END OF CONSTRUCTION.

APPENDIX F

Construction Activities, Material uses and Associated Pollutants

Section 1 – Potential use of Chemical/Toxic Materials

1.1 Practices to minimize Contact with Storm Water

1.1.1 Construction Materials

- A general list of Construction Materials that may be present at various times on site shall be is listed in Section 2.5 . The amount of theses materials on site shall be kept to a minimum by proper scheduling of the construction operations so that the materials will not be brought onsite until they are needed, and any extra materials will be removed from the site as soon as they are determined access
- During periods of rainy season materials shall be stored in covered areas and in secondary containment. Secondary containment hall consist of earthen dikes, containment pits, spill blankets, or other means of containing spill
- Chemicals will be kept in containers and will be labeled at all times. If drums must be kept uncovered, they will be stored at a slight angle to reduce ponding of rain water on the lids and to reduce corrosion
- Materials which have the potential to react with other materials will be stored separately.
- Potentially toxic materials will be stored and transported as far away from drainage facilities as possible.
- Chemicals, drums or bagged materials will not be stored directly on the ground. These items will be placed on pallets and, when possible, in secondary containment.
- Materials will be stored on paved areas when possible
- Storage areas will include measures to prevent or contain spills.
    - Stockpiles materials, waste, containers, and dumpsters' will be stored under temporary roof, or secure plastic sheeting.
    - A berm will be placed around covered and/or paved storage areas to prevent the storm water from running onto the area
    - Containers of paint, chemicals, solvents and other hazardous materials will be stored in garages or sheds with double containment

- Routines inspections of storage areas (at least weekly) will be conducted and checks for external corrosion of material containers will be made.
- Waste will be separated and recycled or disposed of properly and in accordance with applicable laws
- Dumpsters will be placed under roofs or covered with plastic sheeting at the end of each work day and during rainy weather. If plastic used, dumpster contents will be protected from storm water by securing it around the outside of the dumpster.
    - Dumpsters will be inspected regularly for leaks, and any dumpster that is not water-tight will be repaired or replaced.
    - Dumpsters will not be cleaned out by hosing then done on the construction site. Dumpsters shall be returned to the trash hauling contractor for cleaning.

1.1.2 Construction Equipment and Vehicles

- All construction equipment will be maintained so to prevent oils or other fluid leaks. Drip pans will be used for any oil and/or fluid changes that are required for maintenance of equipment. Laws. Secondary containment (such as drain pans or drop cloths) when performing such task.

- Vehicles and equipment will be kept clean. Excessive build-up of oil and grease will be prevented.
- Stockpiled spill cleanup materials shall be placed where readily accessible.
- On-site vehicles and equipment will be inspected regularly for leaks and repaired immediately
- Incoming vehicles and equipment (including delivery trucks, and employee and subcontractor vehicles) will be checked for oil and fluid leaks. Leaking equipment and/or vehicles will not be allowed on site.
- Waste such as grease, used oil or oil filters, antifreeze, cleaning solutions, automotive batteries and hydraulic and transmission fluids will be segregated and recycled.
- Off-site fueling stations will be used as much as possible. If fueling must occur on-site, designated areas located away from drainage will be used.
- On-site fuel storage tanks shall be located over a retention area design to hold the total tank volume. The retention will be covered with an impervious material and installed in a manner to ensure that any spills will be contained in the retention area. A Topping off fuel tanks is discouraged. Secondary containment, such as drop cloths or drain pans will be used when fueling to catch spills or leaks
- Mobile fueling of mobile construction equipment around the job site will be discouraged. The equipment shall be fueled in designated fueling areas.
- Off-site commercial washing shall be used as much as possible. If washing must occur on-site, designated bermed wash areas will be used to prevent wash water contact with storm water, nearby creeks and rivers and other water bodies. As little water as possible shall be used to avoid having to install erosion and sediment controls for the wash area.
- Phosphate free biodegradable soaps shall be used. Their used will be limited to as little as possible to prevent any discharge of soapy water from the wash area
- Steam cleaning will not be permitted.
- Vehicle and equipment storage, cleaning, and maintenance areas will be located in designated areas as delineated on Site Map. These areas shall be located away from significant drainage courses.
- Cleaning and maintenance activities will only be allowed in designated areas,
- Concentrated storm run-on/runoff will be directed around storage and service areas
- Contact of storm water and run-on/runoff with stored materials and equipment will be minimized by raising stored materials and equipment on pallets or other similar devices

1.1.3 Toxics Materials

- All waste will be disposed of in accordance with Federal, State and local regulations'
- All the product will be used before disposing of the container
- The containers original product label will not be removed prior disposal, because it contains important safety and disposal information
- Only the amount of pesticides and herbicides will be prepared as the contractor will not be allowed to over apply to avoid excess runoff.
- The contact shall not apply herbicides and pesticides just before rains.
- Surface dressings should be applied in several smaller applications as opposed to one large application to allow time for infiltration and to avoid excess runoff.
- Brushes, Paint containers will not be cleaned out on dirt on into streets, gutters, storm drains or streams. Water base paints may be rinsed to a sanitary sewer but never a storm drain.

- Thinners and solvents will be filter and reused. Excess oil-based paints and sludge will be disposed of as hazardous waste.
- The contractor shall select designated hazardous waste storage areas
- The contractor shall store hazardous and material waste in storage in covered containers and protected from vandalism
- Contractor shall place hazardous materials and waste containers in a secondary containment
- Contractor shall no mix waste as mixing can cause chemical reactions which make recycling and disposal impossible or complicated.
- The contractor must ensured that west collection services before containers overflow
- The contractor shall ensure that the Hazardous waste will be collected, removed and disposed of only at authorized disposal areas
- Contractor shall ensured that the stock pile spill cleanup materials will be placed where they will be readily accessible

1.2 Construction Material loading, unloading and access areas

Unloading and storage areas on the site will be relocated as construction progresses. There will be located away from creeks or channels or Storm drains or other surface water conveyance features. Delivery and service vehicles travel to and from the site at a regular basis. However the maintenance of these vehicles will be done offsite. Because grading equipment and construction materials are costly to move and are frequently used, they will be stored and maintained on-site in areas where all the app0licable procedural BMPs for equipment storage and maintenance may be applied. These areas may change regularly as the grading operations move across the site but the procedures will remain the same. Soil disturbance in these areas will be minimized. Gravel or base rock will be placed at these sites if necessary to reduce soil disturbance.

Section 2– Accidental Discharges /Malfunction of BMP's

2.1 Accident Prevention/Proper operations of BMPs

The most important means of reducing contamination is to prevent accidents and ensure that all BMPs are operation properly. A list of potential toxic materials at the construction site, and practices to minimize their contact with storm water are previously described in the body of this report. Proper adherence to these suggested practices will minimize accidental contamination.

2.2 Discovery and Breach or Malfunction or leakage or spill

Continuous inspection of the construction site is essential, since spills leakage or damage to BMP's can occur even during dry weather. In addition, visual monitoring could indicate if there has been a breach, malfunction, leakage or spill from a BMP or another source which could result on the discharge of pollutants that would not be visually detectable, or if storm water which comes into contact with the soils amendment or other exposed materials or contamination is allowed to be discharged.

2.3 Immediate corrective action

Immediate corrective action is essential and most important I order to [prevent or reduce contamination from being discharged. Several representative problems are listed below:

2.3.1 Breach/Malfunction

When a breach or malfunction is visually observed, the problem must be corrected immediately. Usually these problems are physical or structural in nature such as debris

removal, reconstructing a berm, or covering stockpiled material to protect it from rainfall.
Any breach /malfunction observed which could have resulted in the discharge of pollutants that would not be visually detectable in storm water require the collection of a sample of discharge.

2.3.2 Leakage or spills
Leakage/ spills are accidental discharges that have the potential to be the greatest source of storm pollution. Clean up of Leakage or spills should be immediate automatic and routine. Handling of all the emergency Leakage/spills controls and measures shall be performed as follows

2.3.2a. Minor Leakage/Spills
Minor Leakage/Spills involves small quantities of oil, gasoline, paint etc. which can be controlled
The following practices to be followed for minor leakage or spills are to:

- Contain the Spill/ Leakage
  - Stop the source of the leakage or spill
  - Berm around leakage or spill area if necessary
  - Use absorbent materials to prevent the spread of leakage or spill area if available

- Recover Spill/ Leakage Materials
  - Sweep Spill/Leaked dry materials immediately. Never attempt to was them away with water or bury them.
  - Recover liquid leakage/spills on dirt areas by digging up and properly disposed of contaminated soil.
  - Recover liquid leakage/spills on paved or impermeable surfaces using dry clan up methods (absorbent materials, cat littler and/or rags)

- Clean the contaminated area and /or disposed of contaminated materials
  - Used clean up rags may be hazardous wastes that must either be sent to a certified industrial laundry or dry cleaner or disposed of properly.
  - Disposed of contaminated materials in proper waste container which is designated for hazardous materials
  - Place small non-hazardous leakage/spills residues and materials inside a sealed container and place into the garbage can or dumpster.
  - Examine labels of leakage/spilled materials for proper waste disposal instruction.
  - Inspect the Leakage/spill area periodically until it can be satisfactory determined that the leakage/spill material has been completely removed from the site.

- Inspect Leakage/spill area periodically until it can be satisfactorily determined that the Leakage/spill material has been completely removed from the site.

2.3.2b. Semi significant Leakage/Spills

Semi significant leakage/spill can be controlled by the first responder along with the aid of other personnel such a laborer, foreman, contractors, etc. This response may require the cessation of all other activities. The leakage/spill control measures taken should be consistent with that use for minor leakage/spills. In addition, the following actions should occur upon discovery of a semi-significant leakage/spill:

- Contain the spread of the leakage/spill
- If the leakage/spill occurs on paved or impermeable surfaces, clean up using dry methods (absorbent materials, cat littler and/or rags). Contain leakage/spill By encircling with absorbent materials and do not let the leakage/spill spread widely.
- If the leakage/spill occurs on dirt areas, immediately contain the leakage/spill by constructing an earthen dike. Dig up and properly disposed of contaminated soil.

2.3.2c. Significant/ Hazardous Leakage/Spills

Significant/ Hazardous Leakage/Spills can not be completely controlled by the on-site personnel. The following steps shall be taken

- Notify the local emergency response agency by dialing 911. Also notify other appropriate local officials. All necessary emergency telephone numbers shall be available at the construction site.
- Notify the Governors Office of Emergency Services Earning Center. (805) 852-7550.
- For Leakage/Spills of federal reportable quantities, notify the National Response Center at (800) 424-8802
- Notifications should first be made by telephone and followed up by a written response as soon as possible
- If safe, stop source of the leakage/Spill and contain leakage/Spills spread.
- A leakage/Spill cleanup contractor or Haz-mat team should be contacted immediately.
- Other agencies which may need to be consulted include local fire, police and public works departments, the highway patrol, the state department of toxic substances control, the California Division of oil and gas, CAL/OSHA, etc.

APPENDIX G

CASQA BMP HANDBOOK FACT SHEETS

Scheduling EC-1

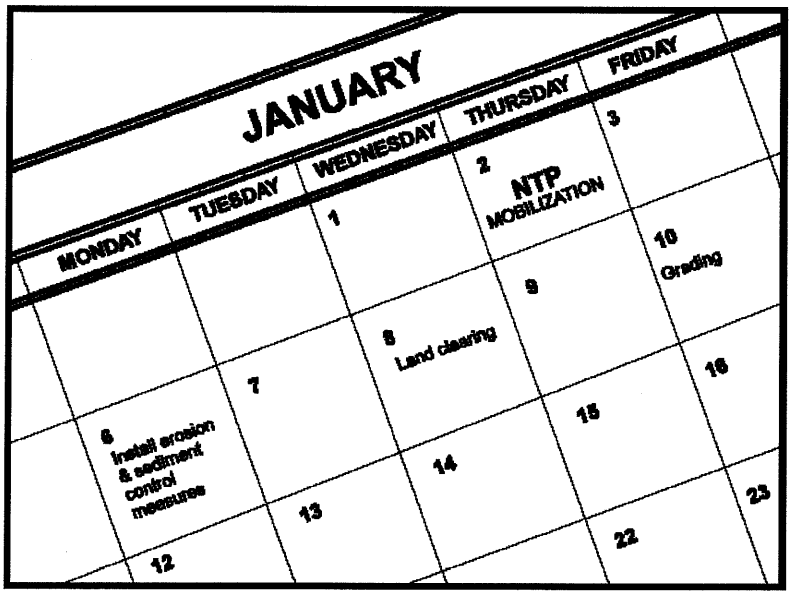

Objectives

EC	Erosion Control	☑
SE	Sediment Control	☒
TR	Tracking Control	☒
WE	Wind Erosion Control	☒
NS	Non-Stormwater Management Control	
WM	Waste Management and Materials Pollution Control	

Legend:

☑ **Primary Objective**

☒ **Secondary Objective**

Targeted Constituents

Sediment	☑
Nutrients	
Trash	
Metals	
Bacteria	
Oil and Grease	
Organics	

Potential Alternatives

None

Description and Purpose

Scheduling is the development of a written plan that includes sequencing of construction activities and the implementation of BMPs such as erosion control and sediment control while taking local climate (rainfall, wind, etc.) into consideration. The purpose is to reduce the amount and duration of soil exposed to erosion by wind, rain, runoff, and vehicle tracking, and to perform the construction activities and control practices in accordance with the planned schedule.

Suitable Applications

Proper sequencing of construction activities to reduce erosion potential should be incorporated into the schedule of every construction project especially during rainy season. Use of other, more costly yet less effective, erosion and sediment control BMPs may often be reduced through proper construction sequencing.

Limitations

- Environmental constraints such as nesting season prohibitions reduce the full capabilities of this BMP.

Implementation

- Avoid rainy periods. Schedule major grading operations during dry months when practical. Allow enough time before rainfall begins to stabilize the soil with vegetation or physical means or to install sediment trapping devices.

- Plan the project and develop a schedule showing each phase of construction. Clearly show how the rainy season relates to soil

CASQA
CALIFORNIA STORMWATER QUALITY ASSOCIATION

disturbing and re-stabilization activities. Incorporate the construction schedule into the SWPPP.

- Include on the schedule, details on the rainy season implementation and deployment of:
  - Erosion control BMPs
  - Sediment control BMPs
  - Tracking control BMPs
  - Wind erosion control BMPs
  - Non-stormwater BMPs
  - Waste management and materials pollution control BMPs
- Include dates for activities that may require non-stormwater discharges such as dewatering, sawcutting, grinding, drilling, boring, crushing, blasting, painting, hydro-demolition, mortar mixing, pavement cleaning, etc.
- Work out the sequencing and timetable for the start and completion of each item such as site clearing and grubbing, grading, excavation, paving, foundation pouring utilities installation, etc., to minimize the active construction area during the rainy season.
  - Sequence trenching activities so that most open portions are closed before new trenching begins.
  - Incorporate staged seeding and re-vegetation of graded slopes as work progresses.
  - Schedule establishment of permanent vegetation during appropriate planting time for specified vegetation.
- Non-active areas should be stabilized as soon as practical after the cessation of soil disturbing activities or one day prior to the onset of precipitation.
- Monitor the weather forecast for rainfall.
- When rainfall is predicted, adjust the construction schedule to allow the implementation of soil stabilization and sediment treatment controls on all disturbed areas prior to the onset of rain.
- Be prepared year round to deploy erosion control and sediment control BMPs. Erosion may be caused during dry seasons by un-seasonal rainfall, wind, and vehicle tracking. Keep the site stabilized year round, and retain and maintain rainy season sediment trapping devices in operational condition.
- Apply permanent erosion control to areas deemed substantially complete during the project's defined seeding window.

Costs

Construction scheduling to reduce erosion may increase other construction costs due to reduced economies of scale in performing site grading. The cost effectiveness of scheduling techniques should be compared with the other less effective erosion and sedimentation controls to achieve a cost effective balance.

Inspection and Maintenance

- Verify that work is progressing in accordance with the schedule. If progress deviates, take corrective actions.
- Amend the schedule when changes are warranted.
- Amend the schedule prior to the rainy season to show updated information on the deployment and implementation of construction site BMPs.

References

Stormwater Quality Handbooks Construction Site Best Management Practices (BMPs) Manual, State of California Department of Transportation (Caltrans), November 2000.

Stormwater Management for Construction Activities Developing Pollution Prevention Plans and Best Management Practices (EPA 832-R-92-005), U.S. Environmental Protection Agency, Office of Water, September 1992.

Preservation Of Existing Vegetation EC-2

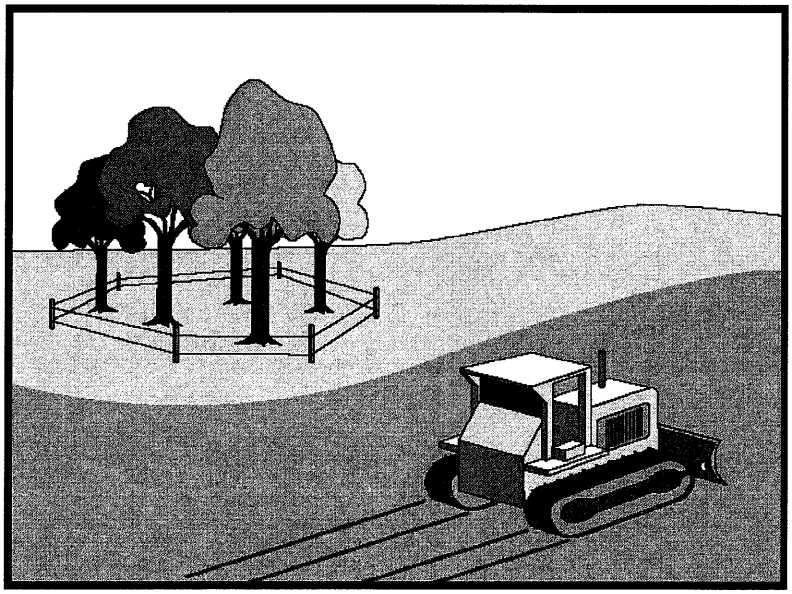

Objectives

EC	Erosion Control	☑
SE	Sediment Control	
TR	Tracking Control	
WE	Wind Erosion Control	
NS	Non-Stormwater Management Control	
WM	Waste Management and Materials Pollution Control	

Legend:

☑ **Primary Objective**

☒ **Secondary Objective**

Targeted Constituents

Sediment	☑
Nutrients	
Trash	
Metals	
Bacteria	
Oil and Grease	
Organics	

Potential Alternatives

None

Description and Purpose

Carefully planned preservation of existing vegetation minimizes the potential of removing or injuring existing trees, vines, shrubs, and grasses that protect soil from erosion.

Suitable Applications

Preservation of existing vegetation is suitable for use on most projects. Large project sites often provide the greatest opportunity for use of this BMP. Suitable applications include the following:

- Areas within the site where no construction activity occurs, or occurs at a later date. This BMP is especially suitable to multi year projects where grading can be phased.
- Areas where natural vegetation exists and is designated for preservation. Such areas often include steep slopes, watercourse, and building sites in wooded areas.
- Areas where local, state, and federal government require preservation, such as vernal pools, wetlands, marshes, certain oak trees, etc. These areas are usually designated on the plans, or in the specifications, permits, or environmental documents.
- Where vegetation designated for ultimate removal can be temporarily preserved and be utilized for erosion control and sediment control.

CASQA
CALIFORNIA STORMWATER QUALITY ASSOCIATION

EC-2 Preservation Of Existing Vegetation

Limitations

- Requires forward planning by the owner/developer, contractor, and design staff.
- Limited opportunities for use when project plans do not incorporate existing vegetation into the site design.
- For sites with diverse topography, it is often difficult and expensive to save existing trees while grading the site satisfactory for the planned development.

Implementation

The best way to prevent erosion is to not disturb the land. In order to reduce the impacts of new development and redevelopment, projects may be designed to avoid disturbing land in sensitive areas of the site (e.g., natural watercourses, steep slopes), and to incorporate unique or desirable existing vegetation into the site's landscaping plan. Clearly marking and leaving a buffer area around these unique areas during construction will help to preserve these areas as well as take advantage of natural erosion prevention and sediment trapping.

Existing vegetation to be preserved on the site must be protected from mechanical and other injury while the land is being developed. The purpose of protecting existing vegetation is to ensure the survival of desirable vegetation for shade, beautification, and erosion control. Mature vegetation has extensive root systems that help to hold soil in place, thus reducing erosion. In addition, vegetation helps keep soil from drying rapidly and becoming susceptible to erosion. To effectively save existing vegetation, no disturbances of any kind should be allowed within a defined area around the vegetation. For trees, no construction activity should occur within the drip line of the tree.

Timing

- Provide for preservation of existing vegetation prior to the commencement of clearing and grubbing operations or other soil disturbing activities in areas where no construction activity is planned or will occur at a later date.

Design and Layout

- Mark areas to be preserved with temporary fencing. Include sufficient setback to protect roots.
  - Orange colored plastic mesh fencing works well.
  - Use appropriate fence posts and adequate post spacing and depth to completely support the fence in an upright position.
- Locate temporary roadways, stockpiles, and layout areas to avoid stands of trees, shrubs, and grass.
- Consider the impact of grade changes to existing vegetation and the root zone.
- Maintain existing irrigation systems where feasible. Temporary irrigation may be required.
- Instruct employees and subcontractors to honor protective devices. Prohibit heavy equipment, vehicular traffic, or storage of construction materials within the protected area.

Costs

There is little cost associated with preserving existing vegetation if properly planned during the project design, and these costs may be offset by aesthetic benefits that enhance property values. During construction, the cost for preserving existing vegetation will likely be less than the cost of applying erosion and sediment controls to the disturbed area. Replacing vegetation inadvertently destroyed during construction can be extremely expensive, sometimes in excess of $10,000 per tree.

Inspection and Maintenance

During construction, the limits of disturbance should remain clearly marked at all times. Irrigation or maintenance of existing vegetation should be described in the landscaping plan. If damage to protected trees still occurs, maintenance guidelines described below should be followed:

- Verify that protective measures remain in place. Restore damaged protection measures immediately.
- Serious tree injuries shall be attended to by an arborist.
- Damage to the crown, trunk, or root system of a retained tree shall be repaired immediately.
- Trench as far from tree trunks as possible, usually outside of the tree drip line or canopy. Curve trenches around trees to avoid large roots or root concentrations. If roots are encountered, consider tunneling under them. When trenching or tunneling near or under trees to be retained, place tunnels at least 18 in. below the ground surface, and not below the tree center to minimize impact on the roots.
- Do not leave tree roots exposed to air. Cover exposed roots with soil as soon as possible. If soil covering is not practical, protect exposed roots with wet burlap or peat moss until the tunnel or trench is ready for backfill.
- Cleanly remove the ends of damaged roots with a smooth cut.
- Fill trenches and tunnels as soon as possible. Careful filling and tamping will eliminate air spaces in the soil, which can damage roots.
- If bark damage occurs, cut back all loosened bark into the undamaged area, with the cut tapered at the top and bottom and drainage provided at the base of the wood. Limit cutting the undamaged area as much as possible.
- Aerate soil that has been compacted over a trees root zone by punching holes 12 in. deep with an iron bar, and moving the bar back and forth until the soil is loosened. Place holes 18 in. apart throughout the area of compacted soil under the tree crown.
- Fertilization
  - Fertilize stressed or damaged broadleaf trees to aid recovery.
  - Fertilize trees in the late fall or early spring.

- Apply fertilizer to the soil over the feeder roots and in accordance with label instructions, but never closer than 3 ft to the trunk. Increase the fertilized area by one-fourth of the crown area for conifers that have extended root systems.

- Retain protective measures until all other construction activity is complete to avoid damage during site cleanup and stabilization.

References

County of Sacramento Tree Preservation Ordinance, September 1981.

Stormwater Quality Handbooks Construction Site Best Management Practices (BMPs) Manual, State of California Department of Transportation (Caltrans), November 2000.

Stormwater Management of the Puget Sound Basin, Technical Manual, Publication #91-75, Washington State Department of Ecology, February 1992.

Water Quality Management Plan for The Lake Tahoe Region, Volume II, Handbook of Management Practices, Tahoe Regional Planning Agency, November 1988.

Hydraulic Mulch EC-3

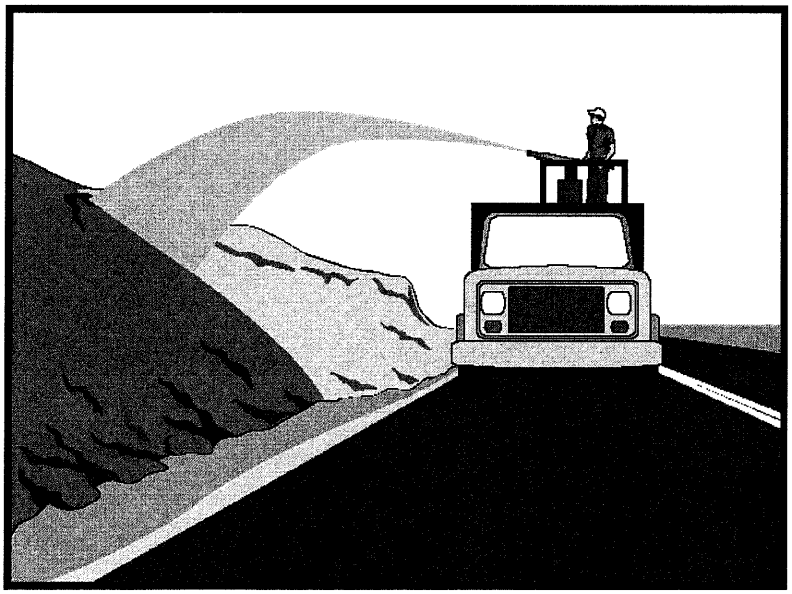

Objectives

EC	Erosion Control	☑
SE	Sediment Control	
TR	Tracking Control	
WE	Wind Erosion Control	☒
NS	Non-Stormwater Management Control	
WM	Waste Management and Materials Pollution Control	

Legend:

☑ **Primary Objective**

☒ **Secondary Objective**

Targeted Constituents

Sediment	☑
Nutrients	
Trash	
Metals	
Bacteria	
Oil and Grease	
Organics	

Potential Alternatives

EC-4 Hydroseeding

EC-5 Soil Binders

EC-6 Straw Mulch

EC-7 Geotextiles and Mats

EC-8 Wood Mulching

Description and Purpose

Hydraulic mulch consists of applying a mixture of shredded wood fiber or a hydraulic matrix, and a stabilizing emulsion or tackifier with hydro-mulching equipment, which temporarily protects exposed soil from erosion by raindrop impact or wind.

Suitable Applications

Hydraulic mulch is suitable for soil disturbed areas requiring temporary protection until permanent stabilization is established, and disturbed areas that will be re-disturbed following an extended period of inactivity.

Limitations

Wood fiber hydraulic mulches are generally short lived and need 24 hours to dry before rainfall occurs to be effective. May require a second application in order to remain effective for an entire rainy season.

Implementation

- Prior to application, roughen embankment and fill areas by rolling with a crimping or punching type roller or by track walking. Track walking shall only be used where other methods are impractical.
- To be effective, hydraulic matrices require 24 hours to dry before rainfall occurs.
- Avoid mulch over spray onto roads, sidewalks, drainage channels, existing vegetation, etc.

CASQA
CALIFORNIA STORMWATER QUALITY ASSOCIATION

- Paper based hydraulic mulches alone shall not be used for erosion control.

Hydraulic Mulches

Wood fiber mulch can be applied alone or as a component of hydraulic matrices. Wood fiber applied alone is typically applied at the rate of 2,000 to 4,000 lb/acre. Wood fiber mulch is manufactured from wood or wood waste from lumber mills or from urban sources.

Hydraulic Matrices

Hydraulic matrices include a mixture of wood fiber and acrylic polymer or other tackifier as binder. Apply as a liquid slurry using a hydraulic application machine (i.e., hydro seeder) at the following minimum rates, or as specified by the manufacturer to achieve complete coverage of the target area: 2,000 to 4,000 lb/acre wood fiber mulch, and 5 to 10% (by weight) of tackifier (acrylic copolymer, guar, psyllium, etc.)

Bonded Fiber Matrix

Bonded fiber matrix (BFM) is a hydraulically applied system of fibers and adhesives that upon drying forms an erosion resistant blanket that promotes vegetation, and prevents soil erosion. BFMs are typically applied at rates from 3,000 lb/acre to 4,000 lb/acre based on the manufacturer's recommendation. A biodegradable BFM is composed of materials that are 100% biodegradable. The binder in the BFM should also be biodegradable and should not dissolve or disperse upon re-wetting. Typically, biodegradable BFMs should not be applied immediately before, during or immediately after rainfall if the soil is saturated. Depending on the product, BFMs typically require 12 to 24 hours to dry and become effective.

Costs

Average cost for installation of wood fiber mulch is $900/acre. Average cost for installation of BFM is $5,500/acre.

Inspection and Maintenance

- Inspect BMPs prior to forecast rain, daily during extended rain events, after rain events, weekly during the rainy season, and at two-week intervals during the non-rainy season.
- Areas where erosion is evident shall be repaired and BMPs re-applied as soon as possible. Care should be exercised to minimize the damage to protected areas while making repairs, as any area damaged will require re-application of BMPs.
- Maintain an unbroken, temporary mulched ground cover throughout the period of construction when the soils are not being reworked.

References

Controlling Erosion of Construction Sites Agricultural Information #347, U.S. Department of Agriculture (USDA), Natural Resources Conservation Service (NRCS) (formerly Soil Conservation Service – SCS).

Guides for Erosion and Sediment Control in California, USDA Soils Conservation Service, January 1991.

Manual of Standards of Erosion and Sediment Control Measures, Association of Bay Area Governments, May 1995.

Sedimentation and Erosion Control, An Inventory of Current Practices Draft, US EPA, April 1990.

Soil Erosion by Water, Agriculture Information Bulletin #513, U.S. Department of Agriculture, Soil Conservation Service.

Stormwater Quality Handbooks Construction Site Best Management Practices (BMPs) Manual, State of California Department of Transportation (Caltrans), November 2000.

Guidance Document: Soil Stabilization for Temporary Slopes, State of California Department of Transportation (Caltrans), November 1999

Stormwater Management of the Puget Sound Basin, Technical Manual, Publication #91-75, Washington State Department of Ecology, February 1992.

Water Quality Management Plan for the Lake Tahoe Region, Volume II, Handbook of Management Practices, Tahoe Regional Planning Agency, November 1988.

Hydroseeding EC-4

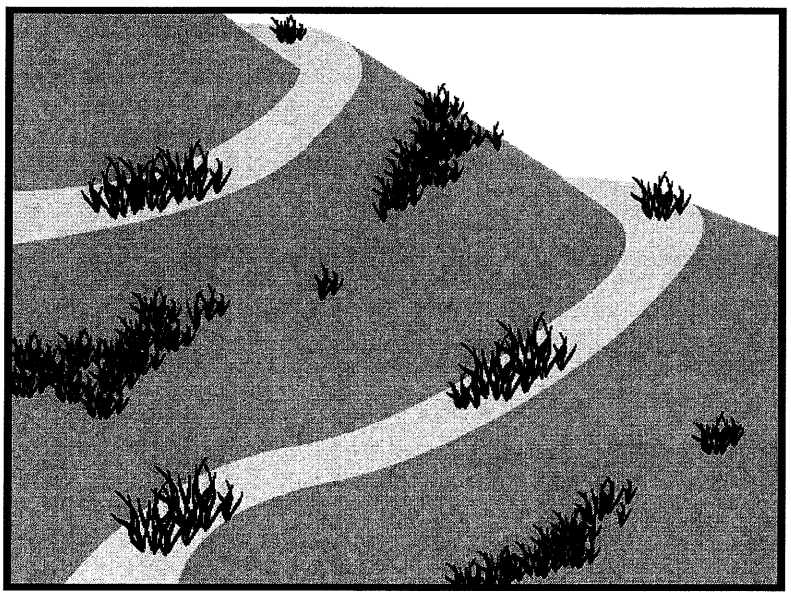

Objectives

EC	Erosion Control	☑
SE	Sediment Control	
TR	Tracking Control	
WE	Wind Erosion Control	☒
NS	Non-Stormwater Management Control	
WM	Waste Management and Materials Pollution Control	

Legend:

☑ **Primary Objective**

☒ **Secondary Objective**

Targeted Constituents

Sediment	☑
Nutrients	
Trash	
Metals	
Bacteria	
Oil and Grease	
Organics	

Potential Alternatives

EC-3 Hydraulic Mulch

EC-5 Soil Binders

EC-6 Straw Mulch

EC-7 Geotextiles and Mats

EC-8 Wood Mulching

Description and Purpose

Hydroseeding typically consists of applying a mixture of wood fiber, seed, fertilizer, and stabilizing emulsion with hydro-mulch equipment, to temporarily protect exposed soils from erosion by water and wind.

Suitable Applications

Hydroseeding is suitable for soil disturbed areas requiring temporary protection until permanent stabilization is established, and disturbed areas that will be re-disturbed following an extended period of inactivity.

Limitations

- Hydroseeding may be used alone only when there is sufficient time in the season to ensure adequate vegetation establishment and coverage to provide adequate erosion control. Otherwise, hydroseeding must be used in conjunction with mulching (i.e., straw mulch).
- Steep slopes are difficult to protect with temporary seeding.
- Temporary seeding may not be appropriate in dry periods without supplemental irrigation.
- Temporary vegetation may have to be removed before permanent vegetation is applied.
- Temporary vegetation is not appropriate for short term inactivity.

CASQA
CALIFORNIA STORMWATER QUALITY ASSOCIATION

Implementation

In order to select appropriate hydroseeding mixtures, an evaluation of site conditions shall be performed with respect to:

- Soil conditions
- Site topography
- Season and climate
- Vegetation types
- Maintenance requirements
- Sensitive adjacent areas
- Water availability
- Plans for permanent vegetation

The local office of the U.S.D.A. Natural Resources Conservation Service (NRCS) is an excellent source of information on appropriate seed mixes.

The following steps shall be followed for implementation:

- Avoid use of hydroseeding in areas where the BMP would be incompatible with future earthwork activities and would have to be removed.
- Hydroseeding can be accomplished using a multiple step or one step process. The multiple step process ensures maximum direct contact of the seeds to soil. When the one step process is used to apply the mixture of fiber, seed, etc., the seed rate shall be increased to compensate for all seeds not having direct contact with the soil.
- Prior to application, roughen the area to be seeded with the furrows trending along the contours.
- Apply a straw mulch to keep seeds in place and to moderate soil moisture and temperature until the seeds germinate and grow.
- All seeds shall be in conformance with the California State Seed Law of the Department of Agriculture. Each seed bag shall be delivered to the site sealed and clearly marked as to species, purity, percent germination, dealer's guarantee, and dates of test. The container shall be labeled to clearly reflect the amount of Pure Live Seed (PLS) contained. All legume seed shall be pellet inoculated. Inoculant sources shall be species specific and shall be applied at a rate of 2 lb of inoculant per 100 lb seed.
- Commercial fertilizer shall conform to the requirements of the California Food and Agricultural Code. Fertilizer shall be pelleted or granular form.
- Follow up applications shall be made as needed to cover weak spots and to maintain adequate soil protection.
- Avoid over spray onto roads, sidewalks, drainage channels, existing vegetation, etc.

Costs

Average cost for installation and maintenance may vary from as low as $300 per acre for flat slopes and stable soils, to $1600 per acre for moderate to steep slopes and/or erosive soils.

Hydroseeding		Installed Cost per Acre
High Density	Ornamentals	$400 - $1600
	Turf Species	$350
	Bunch Grasses	$300 - $1300
Fast Growing	Annual	$350 - $650
	Perennial	$300 - $800
Non-Competing	Native	$300 - $1600
	Non-Native	$400 - $500
Sterile	Cereal Grain	$500

Source: Caltrans Guidance for Soil Stabilization for Temporary Slopes, Nov. 1999

Inspection and Maintenance

- Inspect BMPs prior to forecast rain, daily during extended rain events, after rain events, weekly during the rainy season, and at two-week intervals during the non-rainy season.
- Areas where erosion is evident shall be repaired and BMPs re-applied as soon as possible. Care should be exercised to minimize the damage to protected areas while making repairs, as any area damaged will require re-application of BMPs.
- Where seeds fail to germinate, or they germinate and die, the area must be re-seeded, fertilized, and mulched within the planting season, using not less than half the original application rates.
- Irrigation systems, if applicable, should be inspected daily while in use to identify system malfunctions and line breaks. When line breaks are detected, the system must be shut down immediately and breaks repaired before the system is put back into operation.
- Irrigation systems shall be inspected for complete coverage and adjusted as needed to maintain complete coverage.

References

Stormwater Quality Handbooks Construction Site Best Management Practices (BMPs) Manual, State of California Department of Transportation (Caltrans), November 2000.

Guidance Document: Soil Stabilization for Temporary Slopes, State of California Department of Transportation (Caltrans), November 1999.

Soil Binders

EC-5

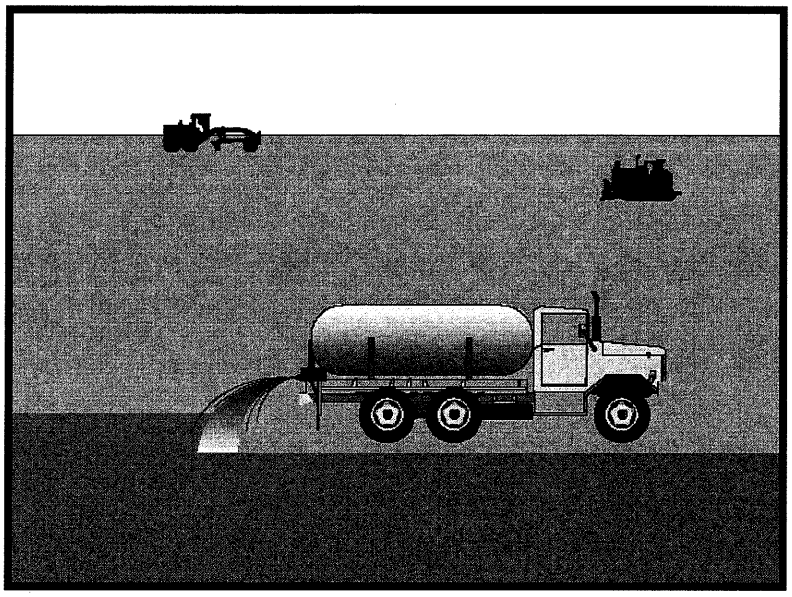

Objectives

EC	Erosion Control	☑
SE	Sediment Control	
TR	Tracking Control	
WE	Wind Erosion Control	☒
NS	Non-Stormwater Management Control	
WM	Waste Management and Materials Pollution Control	

Legend:

☑ **Primary Objective**

☒ **Secondary Objective**

Targeted Constituents

Sediment	☑
Nutrients	
Trash	
Metals	
Bacteria	
Oil and Grease	
Organics	

Potential Alternatives

EC-3 Hydraulic Mulch

EC-4 Hydroseeding

EC-6 Straw Mulch

EC-7 Geotextiles and Mats

EC-8 Wood Mulching

Description and Purpose

Soil binders consist of applying and maintaining a soil stabilizer to exposed soil surfaces. Soil binders are materials applied to the soil surface to temporarily prevent water induced erosion of exposed soils on construction sites. Soil binders also prevent wind erosion.

Suitable Applications

Soil binders are typically applied to disturbed areas requiring short term temporary protection. Because soil binders can often be incorporated into the work, they are a good alternative to mulches in areas where grading activities will soon resume. Soil binders are also suitable for use on stockpiles.

Limitations

- Soil binders are temporary in nature and may need reapplication.
- Soil binders require a minimum curing time until fully effective, as prescribed by the manufacturer. Curing time may be 24 hours or longer. Soil binders may need reapplication after a storm event.
- Soil binders will generally experience spot failures during heavy rainfall events. If runoff penetrates the soil at the top of a slope treated with a soil binder, it is likely that the runoff will undercut the stabilized soil layer and discharge at a point further down slope.

CASQA

CALIFORNIA STORMWATER QUALITY ASSOCIATION

- Soil binders do not hold up to pedestrian or vehicular traffic across treated areas.
- Soil binders may not penetrate soil surfaces made up primarily of silt and clay, particularly when compacted.
- Some soil binders may not perform well with low relative humidity. Under rainy conditions, some agents may become slippery or leach out of the soil.
- Soil binders may not cure if low temperatures occur within 24 hours of application.
- The water quality impacts of soil binders are relatively unknown and some may have water quality impacts due to their chemical makeup.
- A sampling and analysis plan must be incorporated into the SWPPP as soil binders could be a source of non-visible pollutants.

Implementation

General Considerations

- Regional soil types will dictate appropriate soil binders to be used.
- A soil binder must be environmentally benign (non-toxic to plant and animal life), easy to apply, easy to maintain, economical, and should not stain paved or painted surfaces. Soil binders should not pollute stormwater.
- Some soil binders may not be compatible with existing vegetation.
- Performance of soil binders depends on temperature, humidity, and traffic across treated areas.
- Avoid over spray onto roads, sidewalks, drainage channels, existing vegetation, etc.

Selecting a Soil Binder

Properties of common soil binders used for erosion control are provided on Table 1 at the end of this BMP. Use Table 1 to select an appropriate soil binder. Refer to WE-1, Wind Erosion Control, for dust control soil binders.

Factors to consider when selecting a soil binder include the following:

- Suitability to situation - Consider where the soil binder will be applied, if it needs a high resistance to leaching or abrasion, and whether it needs to be compatible with any existing vegetation. Determine the length of time soil stabilization will be needed, and if the soil binder will be placed in an area where it will degrade rapidly. In general, slope steepness is not a discriminating factor for the listed soil binders.
- Soil types and surface materials - Fines and moisture content are key properties of surface materials. Consider a soil binder's ability to penetrate, likelihood of leaching, and ability to form a surface crust on the surface materials.
- Frequency of application - The frequency of application can be affected by subgrade conditions, surface type, climate, and maintenance schedule. Frequent applications could

lead to high costs. Application frequency may be minimized if the soil binder has good penetration, low evaporation, and good longevity. Consider also that frequent application will require frequent equipment clean up.

Plant-Material Based (Short Lived) Binders

Guar: Guar is a non-toxic, biodegradable, natural galactomannan based hydrocolloid treated with dispersant agents for easy field mixing. It should be mixed with water at the rate of 11 to 15 lb per 1,000 gallons. Recommended minimum application rates are as follows:

Application Rates for Guar Soil Stabilizer

Slope (H:V):	Flat	4:1	3:1	2:1	1:1
lb/acre:	40	45	50	60	70

Psyllium: Psyllium is composed of the finely ground muciloid coating of plantago seeds that is applied as a dry powder or in a wet slurry to the surface of the soil. It dries to form a firm but rewettable membrane that binds soil particles together but permits germination and growth of seed. Psyllium requires 12 to 18 hours drying time. Application rates should be from 80 to 200 lb/acre, with enough water in solution to allow for a uniform slurry flow.

Starch: Starch is non-ionic, cold water soluble (pre-gelatinized) granular cornstarch. The material is mixed with water and applied at the rate of 150 lb/acre. Approximate drying time is 9 to 12 hours.

Plant-Material Based (Long Lived) Binders

Pitch and Rosin Emulsion: Generally, a non-ionic pitch and rosin emulsion has a minimum solids content of 48%. The rosin should be a minimum of 26% of the total solids content. The soil stabilizer should be non-corrosive, water dilutable emulsion that upon application cures to a water insoluble binding and cementing agent. For soil erosion control applications, the emulsion is diluted and should be applied as follows:

- For clayey soil: 5 parts water to 1 part emulsion
- For sandy soil: 10 parts water to 1 part emulsion

Application can be by water truck or hydraulic seeder with the emulsion and product mixture applied at the rate specified by the manufacturer.

Polymeric Emulsion Blend Binders

Acrylic Copolymers and Polymers: Polymeric soil stabilizers should consist of a liquid or solid polymer or copolymer with an acrylic base that contains a minimum of 55% solids. The polymeric compound should be handled and mixed in a manner that will not cause foaming or should contain an anti-foaming agent. The polymeric emulsion should not exceed its shelf life or expiration date; manufacturers should provide the expiration date. Polymeric soil stabilizer should be readily miscible in water, non-injurious to seed or animal life, non-flammable, should provide surface soil stabilization for various soil types without totally inhibiting water infiltration, and should not re-emulsify when cured. The applied compound should air cure within a maximum of 36 to 48 hours. Liquid copolymer should be diluted at a rate of 10 parts water to 1 part polymer and the mixture applied to soil at a rate of 1,175 gallons/acre.

Liquid Polymers of Methacrylates and Acrylates: This material consists of a tackifier/sealer that is a liquid polymer of methacrylates and acrylates. It is an aqueous 100% acrylic emulsion blend of 40% solids by volume that is free from styrene, acetate, vinyl, ethoxylated surfactants or silicates. For soil stabilization applications, it is diluted with water in accordance with manufacturer's recommendations, and applied with a hydraulic seeder at the rate of 20 gallons/acre. Drying time is 12 to 18 hours after application.

Copolymers of Sodium Acrylates and Acrylamides: These materials are non-toxic, dry powders that are copolymers of sodium acrylate and acrylamide. They are mixed with water and applied to the soil surface for erosion control at rates that are determined by slope gradient:

Slope Gradient (H:V)	lb/acre
Flat to 5:1	3.0 – 5.0
5:1 to 3:1	5.0 – 10.0
2:2 to 1:1	10.0 – 20.0

Poly-Acrylamide and Copolymer of Acrylamide: Linear copolymer polyacrylamide is packaged as a dry flowable solid. When used as a stand alone stabilizer, it is diluted at a rate of 11lb/1,000 gal of water and applied at the rate of 5.0 lb/acre.

Hydro-Colloid Polymers: Hydro-Colloid Polymers are various combinations of dry flowable poly-acrylamides, copolymers and hydro-colloid polymers that are mixed with water and applied to the soil surface at rates of 55 to 60 lb/acre. Drying times are 0 to 4 hours.

Cementitious-Based Binders

Gypsum: This is a formulated gypsum based product that readily mixes with water and mulch to form a thin protective crust on the soil surface. It is composed of high purity gypsum that is ground, calcined and processed into calcium sulfate hemihydrate with a minimum purity of 86%. It is mixed in a hydraulic seeder and applied at rates 4,000 to 12,000 lb/acre. Drying time is 4 to 8 hours.

Applying Soil Binders

After selecting an appropriate soil binder, the untreated soil surface must be prepared before applying the soil binder. The untreated soil surface must contain sufficient moisture to assist the agent in achieving uniform distribution. In general, the following steps should be followed:

- Follow manufacturer's written recommendations for application rates, pre-wetting of application area, and cleaning of equipment after use.
- Prior to application, roughen embankment and fill areas.
- Consider the drying time for the selected soil binder and apply with sufficient time before anticipated rainfall. Soil binders should not be applied during or immediately before rainfall.
- Avoid over spray onto roads, sidewalks, drainage channels, sound walls, existing vegetation, etc.

- Soil binders should not be applied to frozen soil, areas with standing water, under freezing or rainy conditions, or when the temperature is below 40°F during the curing period.
- More than one treatment is often necessary, although the second treatment may be diluted or have a lower application rate.
- Generally, soil binders require a minimum curing time of 24 hours before they are fully effective. Refer to manufacturer's instructions for specific cure time.
- For liquid agents:
  - Crown or slope ground to avoid ponding.
  - Uniformly pre-wet ground at 0.03 to 0.3 gal/yd^2 or according to manufacturer's recommendations.
  - Apply solution under pressure. Overlap solution 6 to 12 in.
  - Allow treated area to cure for the time recommended by the manufacturer; typically at least 24 hours.
  - Apply second treatment before first treatment becomes ineffective, using 50% application rate.
  - In low humidities, reactivate chemicals by re-wetting with water at 0.1 to 0.2 gal/yd^2.

Costs

Costs vary according to the soil stabilizer selected for implementation. The following are approximate costs:

Soil Binder	Cost per Acre
Plant-Material Based (Short Lived) Binders	$400
Plant-Material Based (Long Lived) Binders	$1,200
Polymeric Emulsion Blend Binders	$400 (1)
Cementitious-Based Binders	$800

(1) $1,200 for Acrylic polymers and copolymers

Source: Caltrans Guidance for Soil Stabilization for Temporary Slopes, Nov. 1999

Inspection and Maintenance

- Inspect BMPs prior to forecast rain, daily during extended rain events, after rain events, weekly during the rainy season, and at two-week intervals during the non-rainy season.
- Areas where erosion is evident shall be repaired and BMPs re-applied as soon as possible. Care should be exercised to minimize the damage to protected areas while making repairs, as any area damaged will require re-application of BMPs.
- Reapply the selected soil binder as needed to maintain effectiveness.

References

Manual of Standards of Erosion and Sediment Control Measures, Association of Bay Area Governments, May 1995.

Sedimentation and Erosion Control, An Inventory of Current Practices Draft, US EPA, April 1990.

Stormwater Quality Handbooks Construction Site Best Management Practices (BMPs) Manual, State of California Department of Transportation (Caltrans), November 2000.

Guidance Document: Soil Stabilization for Temporary Slopes, State of California Department of Transportation (Caltrans), November 1999.

Stormwater Management for Construction Activities, Developing Pollution Prevention Plans and Best Management Practices, EPA 832-R-92005; USEPA, April 1992.

Table 1 Properties of Soil Binders for Erosion Control

Evaluation Criteria	Binder Type			
	Plant Material Based (Short Lived)	Plant Material Based (Long Lived)	Polymeric Emulsion Blends	Cementitious-Based Binders
Relative Cost	Low	Low	Low	Low
Resistance to Leaching	High	High	Low to Moderate	Moderate
Resistance to Abrasion	Moderate	Low	Moderate to High	Moderate to High
Longevity	Short to Medium	Medium	Medium to Long	Medium
Minimum Curing Time before Rain	9 to 18 hours	19 to 24 hours	0 to 24 hours	4 to 8 hours
Compatibility with Existing Vegetation	Good	Poor	Poor	Poor
Mode of Degradation	Biodegradable	Biodegradable	Photodegradable/ Chemically Degradable	Photodegradable/ Chemically Degradable
Labor Intensive	No	No	No	No
Specialized Application Equipment	Water Truck or Hydraulic Mulcher	Water Truck or Hydraulic Mulcher	Water Truck or Hydraulic Mulcher	Water Truck or Hydraulic Mulcher
Liquid/Powder	Powder	Liquid	Liquid/Powder	Powder
Surface Crusting	Yes, but dissolves on rewetting	Yes	Yes, but dissolves on rewetting	Yes
Clean Up	Water	Water	Water	Water
Erosion Control Application Rate	Varies (1)	Varies (1)	Varies (1)	4,000 to 12,000 lbs/acre

(1) See Implementation for specific rates.

Straw Mulch

EC-6

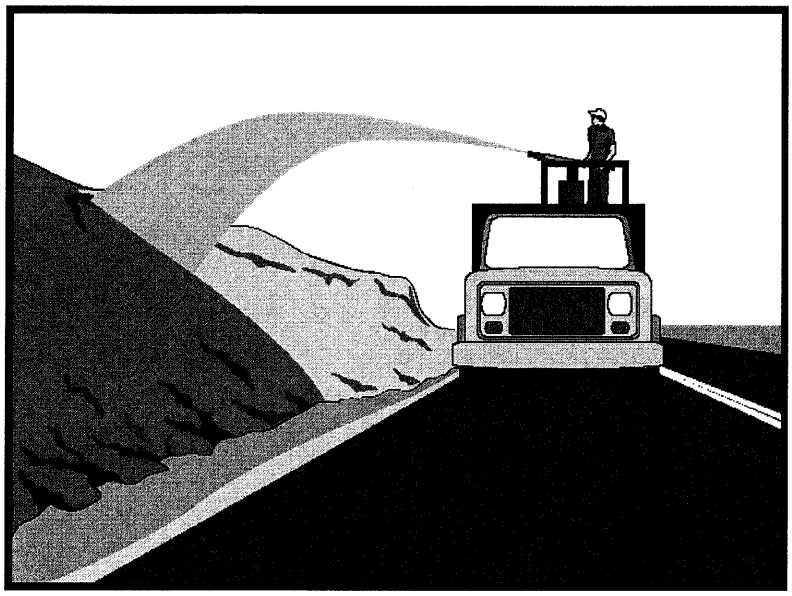

Objectives

EC	Erosion Control	☑
SE	Sediment Control	
TR	Tracking Control	
WE	Wind Erosion Control	
NS	Non-Stormwater Management Control	
WM	Waste Management and Materials Pollution Control	

Legend:

☑ **Primary Objective**

☒ **Secondary Objective**

Targeted Constituents

Sediment	☑
Nutrients	
Trash	
Metals	
Bacteria	
Oil and Grease	
Organics	

Potential Alternatives

EC-3 Hydraulic Mulch

EC-4 Hydroseeding

EC-5 Soil Binders

EC-7 Geotextiles and Mats

EC-8 Wood Mulching

Description and Purpose

Straw mulch consists of placing a uniform layer of straw and incorporating it into the soil with a studded roller or anchoring it with a tackifier stabilizing emulsion. Straw mulch protects the soil surface from the impact of rain drops, preventing soil particles from becoming dislodged.

Suitable Applications

Straw mulch is suitable for soil disturbed areas requiring temporary protection until permanent stabilization is established. Straw mulch is typically used for erosion control on disturbed areas until soils can be prepared for permanent vegetation. Straw mulch is also used in combination with temporary and/or permanent seeding strategies to enhance plant establishment.

Limitations

- Availability of straw and straw blowing equipment may be limited just prior to the rainy season and prior to storms due to high demand.
- There is a potential for introduction of weed seed and unwanted plant material.
- When straw blowers are used to apply straw mulch, the treatment areas must be within 150 ft of a road or surface capable of supporting trucks.
- Straw mulch applied by hand is more time intensive and potentially costly.

CASQA
CALIFORNIA STORMWATER QUALITY ASSOCIATION

- Wind may limit application of straw and blow straw into undesired locations.
- May have to be removed prior to permanent seeding or prior to further earthwork.
- "Punching" of straw does not work in sandy soils, necessitating the use of tackifiers.

Implementation

- Straw shall be derived from wheat, rice, or barley. Where required by the plans, specifications, permits, or environmental documents, native grass straw shall be used.
- A tackifier is the preferred method for anchoring straw mulch to the soil on slopes.
- Crimping, punch roller-type rollers, or track walking may also be used to incorporate straw mulch into the soil on slopes. Track walking shall only be used where other methods are impractical.
- Avoid placing straw onto roads, sidewalks, drainage channels, sound walls, existing vegetation, etc.
- Straw mulch with tackifier shall not be applied during or immediately before rainfall.
- In San Diego, use of straw near wood framed home construction has been frowned on by the Fire Marshall.

Application Procedures

- Apply straw at a minimum rate of 4,000 lb/acre, either by machine or by hand distribution.
- Roughen embankments and fill rills before placing the straw mulch by rolling with a crimping or punching type roller or by track walking.
- Evenly distribute straw mulch on the soil surface.
- Anchor straw mulch to the soil surface by "punching" it into the soil mechanically (incorporating). Alternatively, use a tackifier to adhere straw fibers.
- Methods for holding the straw mulch in place depend upon the slope steepness, accessibility, soil conditions, and longevity.
  - On small areas, a spade or shovel can be used to punch in straw mulch.
  - On slopes with soils that are stable enough and of sufficient gradient to safely support construction equipment without contributing to compaction and instability problems, straw can be "punched" into the ground using a knife blade roller or a straight bladed coulter, known commercially as a "crimper".
  - On small areas and/or steep slopes, straw can also be held in place using plastic netting or jute. The netting shall be held in place using 11 gauge wire staples, geotextile pins or wooden stakes as described in EC-7, Geotextiles and Mats.
  - A tackifier acts to glue the straw fibers together and to the soil surface. The tackifier shall be selected based on longevity and ability to hold the fibers in place. A tackifier is

typically applied at a rate of 125 lb/acre. In windy conditions, the rates are typically 180 lb/acre.

Costs

Average annual cost for installation and maintenance (3-4 months useful life) is $2,500 per acre. Application by hand is more time intensive and potentially costly.

Inspection and Maintenance

- Inspect BMPs prior to forecast rain, daily during extended rain events, after rain events, weekly during the rainy season, and at two-week intervals during the non-rainy season.
- Areas where erosion is evident should be repaired and BMPs re-applied as soon as possible. Care should be exercised to minimize the damage to protected areas while making repairs, as any area damaged will require re-application of BMPs.
- The key consideration in inspection and maintenance is that the straw needs to last long enough to achieve erosion control objectives.
- Maintain an unbroken, temporary mulched ground cover while disturbed soil areas are inactive. Repair any damaged ground cover and re-mulch exposed areas.
- Reapplication of straw mulch and tackifier may be required to maintain effective soil stabilization over disturbed areas and slopes.

References

Controlling Erosion of Construction Sites, Agricultural Information Bulletin #347, U.S. Department of Agriculture (USDA), Natural Resources Conservation Service (NRCS) (formerly Soil Conservation Service – SCS).

Guides for Erosion and Sediment Control in California, USDA Soils Conservation Service, January 1991.

Manual of Standards of Erosion and Sediment Control Measures, Association of Bay Area Governments, May 1995.

Soil Erosion by Water, Agricultural Information Bulletin #513, U.S. Department of Agriculture, Soil Conservation Service.

Stormwater Quality Handbooks Construction Site Best Management Practices (BMPs) Manual, State of California Department of Transportation (Caltrans), November 2000.

Stormwater Management of the Puget Sound Basin, Technical Manual, Publication #91-75, Washington State Department of Ecology, February 1992.

Water Quality Management Plan for the Lake Tahoe Region, Volume II, Handbook of Management Practices, Tahoe Regional Planning Agency, November 1988.

Wood Mulching EC-8

Objectives

EC	Erosion Control	☑
SE	Sediment Control	
TR	Tracking Control	
WE	Wind Erosion Control	☒
NS	Non-Stormwater Management Control	
WM	Waste Management and Materials Pollution Control	

Legend:

☑ **Primary Objective**

☒ **Secondary Objective**

Targeted Constituents

Sediment	☑
Nutrients	
Trash	
Metals	
Bacteria	
Oil and Grease	
Organics	

Potential Alternatives

EC-3 Hydraulic Mulch

EC-4 Hydroseeding

EC-5 Soil Binders

EC-6 Straw Mulch

EC-7 Geotextiles and Mats

Description and Purpose

Wood mulching consist of applying a mixture of shredded wood mulch, bark or compost to disturbed soils. The primary function of wood mulching is to reduce erosion by protecting bare soil from rainfall impact, increasing infiltration, and reducing runoff.

Suitable Applications

Wood mulching is suitable for disturbed soil areas requiring temporary protection until permanent stabilization is established.

Limitations

- Not suitable for use on slopes steeper than 3:1 (H:V). Best suited to flat areas or gentle slopes or 5:1 (H:V) or flatter.
- Wood mulch and compost may introduce unwanted species.
- Not suitable for areas exposed to concentrated flows.
- May need to be removed prior to further earthwork.

Implementation

Mulch Selection

There are many types of mulches. Selection of the appropriate type of mulch should be based on the type of application, site conditions, and compatibility with planned or future uses.

Application Procedures

Prior to application, after existing vegetation has been removed, roughen embankment and fill areas by rolling with a device such

CASQA
CALIFORNIA STORMWATER QUALITY ASSOCIATION

as a punching type roller or by track walking. The construction application procedures for mulches vary significantly depending upon the type of mulching method specified. Two methods are highlighted here:

- Green Material: This type of mulch is produced by the recycling of vegetation trimmings such as grass, shredded shrubs, and trees. Methods of application are generally by hand although pneumatic methods are available.
  - Green material can be used as a temporary ground cover with or without seeding.
  - The green material should be evenly distributed on site to a depth of not more than 2 in.
- Shredded Wood: Suitable for ground cover in ornamental or revegetated plantings.
  - Shredded wood/bark is conditionally suitable. See note under limitations.
  - Distribute by hand or use pneumatic methods.
  - Evenly distribute the mulch across the soil surface to a depth of 2 to 3 in.
- Avoid mulch placement onto roads, sidewalks, drainage channels, existing vegetation, etc.

Costs

Average annual cost for installation and maintenance (3-4 months useful life) is around $4,000 per acre, but cost can increase if the source is not close to the project site.

Inspection and Maintenance

- Inspect BMPs prior to forecast rain, daily during extended rain events, after rain events, weekly during the rainy season, and at two-week intervals during the non-rainy season.
- Areas where erosion is evident shall be repaired and BMPs reapplied as soon as possible. Care should be exercised to minimize the damage to protected areas while making repairs, as any area damaged will require reapplication of BMPs.
- Regardless of the mulching technique selected, the key consideration in inspection and maintenance is that the mulch needs to last long enough to achieve erosion control objectives. If the mulch is applied as a stand alone erosion control method over disturbed areas (without seed), it should last the length of time the site will remain barren or until final re-grading and revegetation.
- Where vegetation is not the ultimate cover, such as ornamental and landscape applications of bark or wood chips, inspection and maintenance should focus on longevity and integrity of the mulch.
- Reapply mulch when bare earth becomes visible.

References

Controlling Erosion of Construction Sites Agriculture Information Bulletin #347, U.S. Department of Agriculture (USDA), Natural Resources Conservation Service (NRCS) (formerly Soil Conservation Service – SCS).

Guides for Erosion and Sediment Control in California, USDA Soils Conservation Service, January 1991.

Manual of Standards of Erosion and Sediment Control Measures, Association of Bay Area Governments, May 1995.

Proposed Guidance Specifying Management Measures for Sources of Nonpoint Pollution in Coastal Waters, Work Group Working Paper, USEPA, April 1992.

Sedimentation and Erosion Control, An Inventory of Current Practices Draft, U.S. EPA, April 1990.

Soil Erosion by Water Agricultural Information Bulletin #513, U.S. Department of Agriculture, Soil Conservation Service.

Stormwater Quality Handbooks Construction Site Best Management Practices (BMPs) Manual, State of California Department of Transportation (Caltrans), November 2000.

Water Quality Management Plan for the Lake Tahoe Region, Volume II, Handbook of Management Practices, Tahoe Regional Planning Agency, November 1988.

Earth Dikes and Drainage Swales EC-9

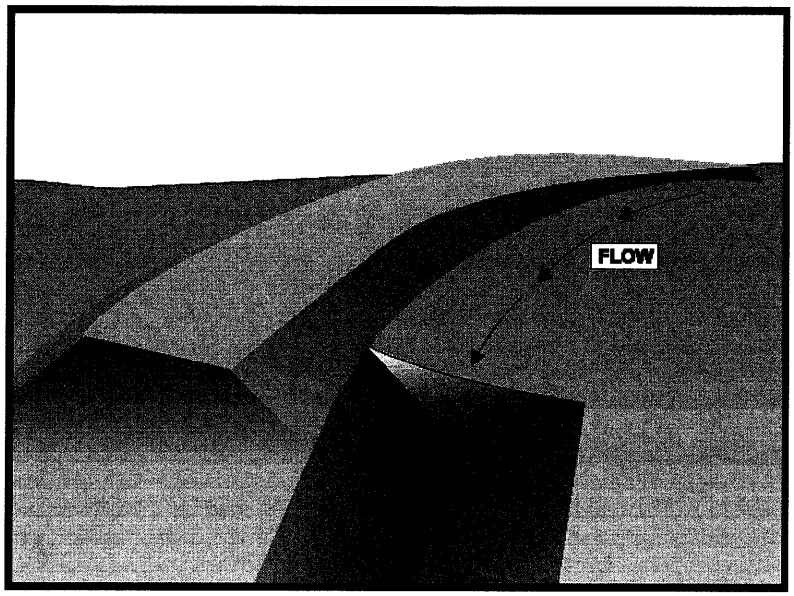

Objectives

EC	Erosion Control	☑
SE	Sediment Control	
TR	Tracking Control	
WE	Wind Erosion Control	
NS	Non-Stormwater Management Control	
WM	Waste Management and Materials Pollution Control	

Legend:

☑ **Primary Objective**

☒ **Secondary Objective**

Targeted Constituents

Sediment	☑
Nutrients	
Trash	
Metals	
Bacteria	
Oil and Grease	
Organics	

Potential Alternatives

None

Description and Purpose

An earth dike is a temporary berm or ridge of compacted soil used to divert runoff or channel water to a desired location. A drainage swale is a shaped and sloped depression in the soil surface used to convey runoff to a desired location. Earth dikes and drainage swales are used to divert off site runoff around the construction site, divert runoff from stabilized areas and disturbed areas, and direct runoff into sediment basins or traps.

Suitable Applications

Earth dikes and drainage swales are suitable for use, individually or together, where runoff needs to be diverted from one area and conveyed to another.

- Earth dikes and drainage swales may be used:
  - To convey surface runoff down sloping land
  - To intercept and divert runoff to avoid sheet flow over sloped surfaces
  - To divert and direct runoff towards a stabilized watercourse, drainage pipe or channel
  - To intercept runoff from paved surfaces
  - Below steep grades where runoff begins to concentrate
  - Along roadways and facility improvements subject to flood drainage

CASQA
CALIFORNIA STORMWATER QUALITY ASSOCIATION

- At the top of slopes to divert runon from adjacent or undisturbed slopes
- At bottom and mid slope locations to intercept sheet flow and convey concentrated flows
- Divert sediment laden runoff into sediment basins or traps

Limitations

Dikes should not be used for drainage areas greater than 10 acres or along slopes greater than 10 percent. For larger areas more permanent drainage structures should be built. All drainage structures should be built in compliance with local municipal requirements.

- Earth dikes may create more disturbed area on site and become barriers to construction equipment.
- Earth dikes must be stabilized immediately, which adds cost and maintenance concerns.
- Diverted stormwater may cause downstream flood damage.
- Dikes should not be constructed of soils that may be easily eroded.
- Regrading the site to remove the dike may add additional cost.
- Temporary drains and swales or any other diversion of runoff should not adversely impact upstream or downstream properties.
- Temporary drains and swales must conform to local floodplain management requirements.
- Earth dikes/drainage swales are not suitable as sediment trapping devices.
- It may be necessary to use other soil stabilization and sediment controls such as check dams, plastics, and blankets, to prevent scour and erosion in newly graded dikes, swales, and ditches.

Implementation

The temporary earth dike is a berm or ridge of compacted soil, located in such a manner as to divert stormwater to a sediment trapping device or a stabilized outlet, thereby reducing the potential for erosion and offsite sedimentation. Earth dikes can also be used to divert runoff from off site and from undisturbed areas away from disturbed areas and to divert sheet flows away from unprotected slopes.

An earth dike does not itself control erosion or remove sediment from runoff. A dike prevents erosion by directing runoff to an erosion control device such as a sediment trap or directing runoff away from an erodible area. Temporary diversion dikes should not adversely impact adjacent properties and must conform to local floodplain management regulations, and should not be used in areas with slopes steeper than 10%.

Slopes that are formed during cut and fill operations should be protected from erosion by runoff. A combination of a temporary drainage swale and an earth dike at the top of a slope can divert runoff to a location where it can be brought to the bottom of the slope (see EC-11, Slope Drains). A combination dike and swale is easily constructed by a single pass of a bulldozer or grader and

compacted by a second pass of the tracks or wheels over the ridge. Diversion structures should be installed when the site is initially graded and remain in place until post construction BMPs are installed and the slopes are stabilized.

Diversion practices concentrate surface runoff, increasing its velocity and erosive force. Thus, the flow out of the drain or swale must be directed onto a stabilized area or into a grade stabilization structure. If significant erosion will occur, a swale should be stabilized using vegetation, chemical treatment, rock rip-rap, matting, or other physical means of stabilization. Any drain or swale that conveys sediment laden runoff must be diverted into a sediment basin or trap before it is discharged from the site.

General

- Care must be applied to correctly size and locate earth dikes, drainage swales. Excessively steep, unlined dikes, and swales are subject to erosion and gully formation.
- Conveyances should be stabilized.
- Use a lined ditch for high flow velocities.
- Select flow velocity based on careful evaluation of the risks due to erosion of the measure, soil types, overtopping, flow backups, washout, and drainage flow patterns for each project site.
- Compact any fills to prevent unequal settlement.
- Do not divert runoff onto other property without securing written authorization from the property owner.
- When possible, install and utilize permanent dikes, swales, and ditches early in the construction process.
- Provide stabilized outlets.

Earth Dikes

Temporary earth dikes are a practical, inexpensive BMP used to divert stormwater runoff. Temporary diversion dikes should be installed in the following manner:

- All dikes should be compacted by earth moving equipment.
- All dikes should have positive drainage to an outlet.
- All dikes should have 2:1 or flatter side slopes, 18 in. minimum height, and a minimum top width of 24 in. Wide top widths and flat slopes are usually needed at crossings for construction traffic.
- The outlet from the earth dike must function with a minimum of erosion. Runoff should be conveyed to a sediment trapping device such as a Sediment Trap (SE-3) or Sediment Basin (SE-2) when either the dike channel or the drainage area above the dike are not adequately stabilized.

- Temporary stabilization may be achieved using seed and mulching for slopes less than 5% and either rip-rap or sod for slopes in excess of 5%. In either case, stabilization of the earth dike should be completed immediately after construction or prior to the first rain.
- If riprap is used to stabilize the channel formed along the toe of the dike, the following typical specifications apply:

Channel Grade	Riprap Stabilization
0.5-1.0%	4 in. Rock
1.1-2.0%	6 in. Rock
2.1-4.0%	8 in. Rock
4.1-5.0%	8 in. -12 in. Riprap

- The stone riprap, recycled concrete, etc. used for stabilization should be pressed into the soil with construction equipment.
- Filter cloth may be used to cover dikes in use for long periods.
- Construction activity on the earth dike should be kept to a minimum.

Drainage Swales

Drainage swales are only effective if they are properly installed. Swales are more effective than dikes because they tend to be more stable. The combination of a swale with a dike on the downhill side is the most cost effective diversion.

Standard engineering design criteria for small open channel and closed conveyance systems should be used (see the local drainage design manual). Unless local drainage design criteria state otherwise, drainage swales should be designed as follows:

- No more than 5 acres may drain to a temporary drainage swale.
- Place drainage swales above or below, not on, a cut or fill slope.
- Swale bottom width should be at least 2 ft
- Depth of the swale should be at least 18 in.
- Side slopes should be 2:1 or flatter.
- Drainage or swales should be laid at a grade of at least 1 percent, but not more than 15 percent.
- The swale must not be overtopped by the peak discharge from a 10-year storm, irrespective of the design criteria stated above.
- Remove all trees, stumps, obstructions, and other objectionable material from the swale when it is built.
- Compact any fill material along the path of the swale.

- Stabilize all swales immediately. Seed and mulch swales at a slope of less than 5 percent, and use rip-rap or sod for swales with a slope between 5 and 15 percent. For temporary swales, geotextiles and mats (EC-7) may provide immediate stabilization.
- Irrigation may be required to establish sufficient vegetation to prevent erosion.
- Do not operate construction vehicles across a swale unless a stabilized crossing is provided.
- Permanent drainage facilities must be designed by a professional engineer (see the local drainage design criteria for proper design).
- At a minimum, the drainage swale should conform to predevelopment drainage patterns and capacities.
- Construct the drainage swale with a positive grade to a stabilized outlet.
- Provide erosion protection or energy dissipation measures if the flow out of the drainage swale can reach an erosive velocity.

Costs

- Cost ranges from $15 to $55 per ft for both earthwork and stabilization and depends on availability of material, site location, and access.
- Small dikes: $2.50 - $6.50/linear ft; Large dikes: $2.50/yd^3.
- The cost of a drainage swale increases with drainage area and slope. Typical swales for controlling internal erosion are inexpensive, as they are quickly formed during routine earthwork.

Inspection and Maintenance

- Inspect BMPs prior to forecast rain, daily during extended rain events, after rain events, weekly during the rainy season, and at two-week intervals during the non-rainy season.
- Inspect BMPs subject to non-stormwater discharges daily while non-stormwater discharges occur.
- Inspect ditches and berms for washouts. Replace lost riprap, damaged linings or soil stabilizers as needed.
- Inspect channel linings, embankments, and beds of ditches and berms for erosion and accumulation of debris and sediment. Remove debris and sediment and repair linings and embankments as needed.
- Temporary conveyances should be completely removed as soon as the surrounding drainage area has been stabilized or at the completion of construction

References

Erosion and Sediment Control Handbook, S.J. Goldman, K. Jackson, T.A. Bursetynsky, P.E., McGraw Hill Book Company, 1986.

Manual of Standards of Erosion and Sediment Control Measures, Association of Bay Area Governments, May 1995.

National Association of Home Builders (NAHB). Stormwater Runoff & Nonpoint Source Pollution Control Guide for Builders and Developers. National Association of Home Builders, Washington, D.C., 1995

National Management Measures to Control Nonpoint Source Pollution from Urban Areas, United States Environmental Protection Agency, 2002.

Southeastern Wisconsin Regional Planning Commission (SWRPC). Costs of Urban Nonpoint Source Water Pollution Control Measures. Technical Report No. 31. Southeastern Wisconsin Regional Planning Commission, Waukesha, WI. 1991

Stormwater Quality Handbooks Construction Site Best Management Practices (BMPs) Manual, State of California Department of Transportation (Caltrans), November 2000.

Stormwater Management of the Puget Sound Basin, Technical Manual, Publication #91-75, Washington State Department of Ecology, February 1992.

Water Quality Management Plan for the Lake Tahoe Region, Volume II, Handbook of Management Practices, Tahoe Regional Planning Agency, November 1988.

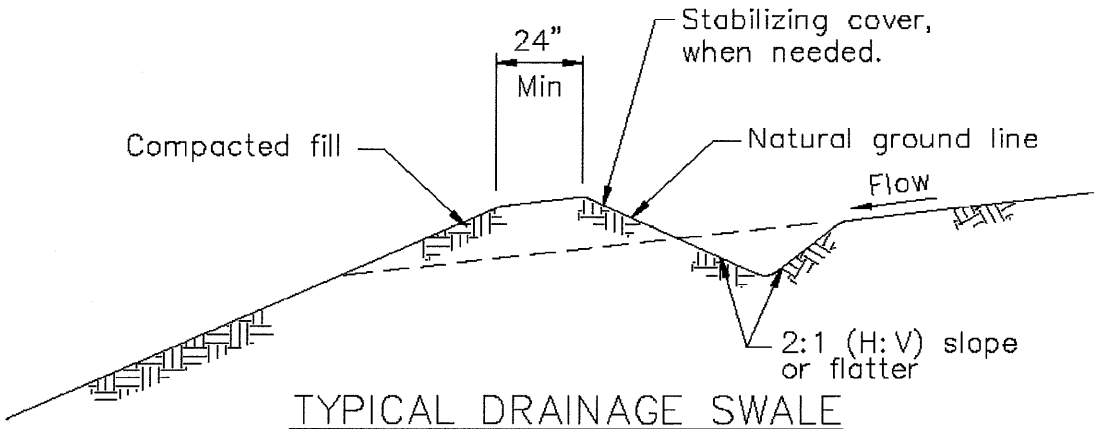

TYPICAL DRAINAGE SWALE
NOT TO SCALE

NOTES:

1. Stabilize inlet, outlets and slopes.
2. Properly compact the subgrade.

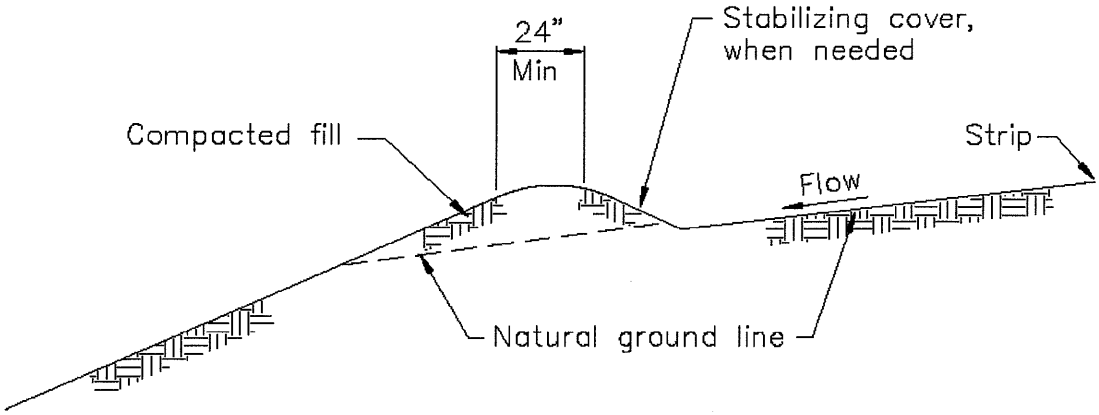

TYPICAL EARTH DIKE
NOT TO SCALE

Velocity Dissipation Devices EC-10

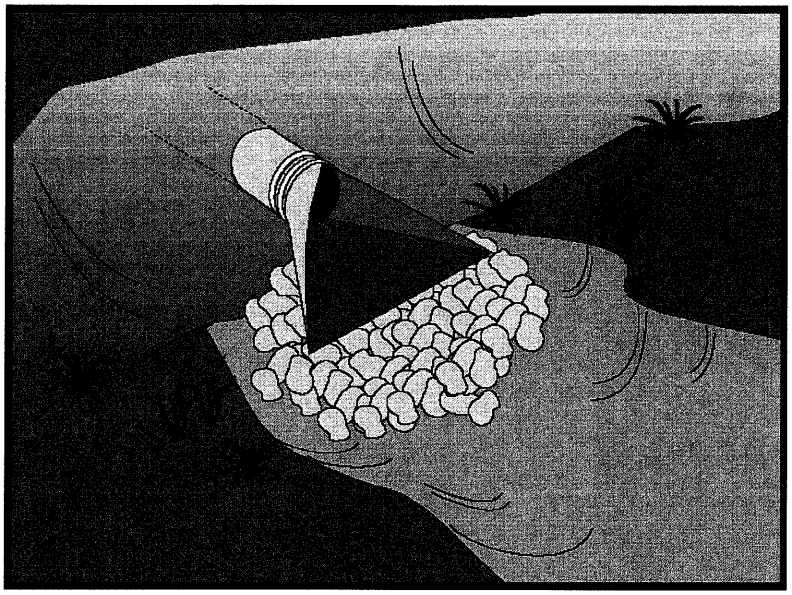

Objectives

EC	Erosion Control	☑
SE	Sediment Control	
TR	Tracking Control	
WE	Wind Erosion Control	
NS	Non-Stormwater Management Control	
WM	Waste Management and Materials Pollution Control	

Legend:

☑ **Primary Objective**

☒ **Secondary Objective**

Targeted Constituents

Sediment	☑
Nutrients	
Trash	
Metals	
Bacteria	
Oil and Grease	
Organics	

Potential Alternatives

None

Description and Purpose

Outlet protection is a physical device composed of rock, grouted riprap, or concrete rubble, which is placed at the outlet of a pipe or channel to prevent scour of the soil caused by concentrated, high velocity flows.

Suitable Applications

Whenever discharge velocities and energies at the outlets of culverts, conduits, or channels are sufficient to erode the next downstream reach. This includes temporary diversion structures to divert runon during construction.

- These devices may be used at the following locations:
  - Outlets of pipes, drains, culverts, slope drains, diversion ditches, swales, conduits, or channels.
  - Outlets located at the bottom of mild to steep slopes.
  - Discharge outlets that carry continuous flows of water.
  - Outlets subject to short, intense flows of water, such as flash floods.
  - Points where lined conveyances discharge to unlined conveyances

Limitations

- Large storms or high flows can wash away the rock outlet protection and leave the area susceptible to erosion.

CASQA
CALIFORNIA STORMWATER QUALITY ASSOCIATION

- Sediment captured by the rock outlet protection may be difficult to remove without removing the rock.
- Outlet protection may negatively impact the channel habitat.
- Grouted riprap may break up in areas of freeze and thaw.
- If there is not adequate drainage, and water builds up behind grouted riprap, it may cause the grouted riprap to break up due to the resulting hydrostatic pressure.

Implementation

General

Outlet protection is needed where discharge velocities and energies at the outlets of culverts, conduits or channels are sufficient to erode the immediate downstream reach. This practice protects the outlet from developing small eroded pools (plange pools), and protects against gully erosion resulting from scouring at a culvert mouth.

Design and Layout

As with most channel design projects, depth of flow, roughness, gradient, side slopes, discharge rate, and velocity should be considered in the outlet design. Compliance to local and state regulations should also be considered while working in environmentally sensitive streambeds. General recommendations for rock size and length of outlet protection mat are shown in the rock outlet protection figure in this BMP and should be considered minimums. The apron length and rock size gradation are determined using a combination of the discharge pipe diameter and estimate discharge rate: Select the longest apron length and largest rock size suggested by the pipe size and discharge rate. Where flows are conveyed in open channels such as ditches and swales, use the estimated discharge rate for selecting the apron length and rock size. Flows should be same as the culvert or channel design flow but never the less than the peak 5 year flow for temporary structures planned for one rainy season, or the 10 year peak flow for temporary structures planned for two or three rainy seasons.

- There are many types of energy dissipaters, with rock being the one that is represented in the attached figure.
- Best results are obtained when sound, durable, and angular rock is used.
- Install riprap, grouted riprap, or concrete apron at selected outlet. Riprap aprons are best suited for temporary use during construction. Grouted or wired tied rock riprap can minimize maintenance requirements.
- Rock outlet protection is usually less expensive and easier to install than concrete aprons or energy dissipaters. It also serves to trap sediment and reduce flow velocities.
- Carefully place riprap to avoid damaging the filter fabric.
  - Stone 4 in. to 6 in. may be carefully dumped onto filter fabric from a height not to exceed 12 in.
  - Stone 8 in. to 12 in. must be hand placed onto filter fabric, or the filter fabric may be covered with 4 in. of gravel and the 8 in. to 12 in. rock may be dumped from a height not to exceed 16 in.

- Stone greater than 12 in. shall only be dumped onto filter fabric protected with a layer of gravel with a thickness equal to one half the D_{50} rock size, and the dump height limited to twice the depth of the gravel protection layer thickness.

- For proper operation of apron: Align apron with receiving stream and keep straight throughout its length. If a curve is needed to fit site conditions, place it in upper section of apron.

- Outlets on slopes steeper than 10 percent should have additional protection.

Costs

Costs are low if material is readily available. If material is imported, costs will be higher. Average installed cost is $150 per device.

Inspection and Maintenance

- Inspect BMPs prior to forecast rain, daily during extended rain events, after rain events, weekly during the rainy season, and at two-week intervals during the non-rainy season.

- Inspect BMPs subjected to non-stormwater discharges daily while non-stormwater discharges occur.

- Inspect apron for displacement of the riprap and damage to the underlying fabric. Repair fabric and replace riprap that has washed away. If riprap continues to wash away, consider using larger material.

- Inspect for scour beneath the riprap and around the outlet. Repair damage to slopes or underlying filter fabric immediately.

- Temporary devices should be completely removed as soon as the surrounding drainage area has been stabilized or at the completion of construction.

References

County of Sacramento Improvement Standards, Sacramento County, May 1989.

Erosion and Sediment Control Handbook, S.J. Goldman, K. Jackson, T.A. Bursztynsky, P.E., McGraw Hill Book Company, 1986.

Handbook of Steel Drainage & Highway Construction, American Iron and Steel Institute, 1983.

Manual of Standards of Erosion and Sediment Control Measures, Association of Bay Area Governments, May 1995.

Stormwater Quality Handbooks Construction Site Best Management Practices (BMPs) Manual, state of California Department of Transportation (Caltrans), November 2000.

Stormwater Management of the Puget Sound Basin, Technical Manual, Publication #91-75, Washington State Department of Ecology, February 1992.

Water Quality Management Plan for the Lake Tahoe Region, Volume II, Handbook of Management Practices, Tahoe Regional Planning Agency, November 1988.

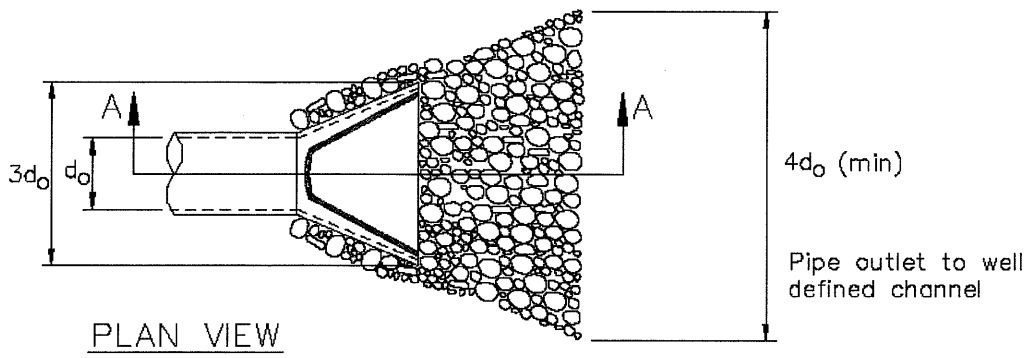

PLAN VIEW

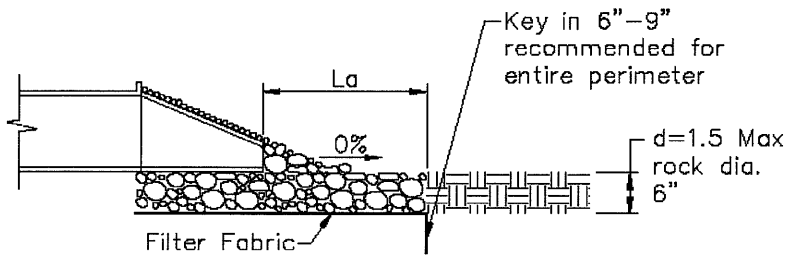

SECTION A–A

Pipe Diameter inches	Discharge ft^3/s	Apron Length, La ft	Rip Rap D_{50} Diameter Min inches
12	5	10	4
	10	13	6
18	10	10	6
	20	16	8
	30	23	12
	40	26	16
24	30	16	8
	40	26	8
	50	26	12
	60	30	16

For larger or higher flows consult a Registered Civil Engineer
Source: USDA - SCS

Slope Drains EC-11

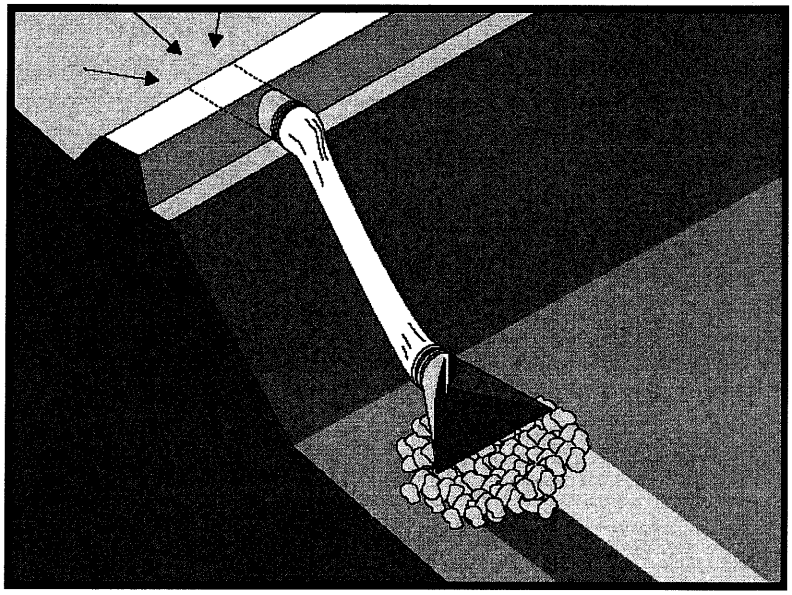

Objectives

EC	Erosion Control	☑
SE	Sediment Control	
TR	Tracking Control	
WE	Wind Erosion Control	
NS	Non-Stormwater Management Control	
WM	Waste Management and Materials Pollution Control	

Legend:

☑ **Primary Objective**

☒ **Secondary Objective**

Targeted Constituents

Sediment	☑
Nutrients	
Trash	
Metals	
Bacteria	
Oil and Grease	
Organics	

Potential Alternatives

EC-9 Earth Dike, Drainage Swales

Description and Purpose

A slope drain is a pipe used to intercept and direct surface runoff or groundwater into a stabilized watercourse, trapping device, or stabilized area. Slope drains are used with earth dikes and drainage ditches to intercept and direct surface flow away from slope areas to protect cut or fill slopes.

Suitable Applications

- Where concentrated flow of surface runoff must be conveyed down a slope in order to prevent erosion.
- Drainage for top of slope diversion dikes or swales.
- Drainage for top of cut and fill slopes where water can accumulate.
- Emergency spillway for a sediment basin.

Limitations

Installation is critical for effective use of the pipe slope drain to minimize potential gully erosion.

- Maximum drainage area per slope drain is 10 acres. (For large areas use a paved chute, rock lined channel, or additional pipes.)
- Severe erosion may result when slope drains fail by overtopping, piping, or pipe separation.

CASQA
CALIFORNIA STORMWATER QUALITY ASSOCIATION

- During large storms, pipe slope drains may become clogged or over charged, forcing water around the pipe and causing extreme slope erosion.
- If the sectional downdrain is not sized correctly, the runoff can spill over the drain sides causing gully erosion and potential failure of the structure.

- Dissipation of high flow velocities at the pipe outlet is required to avoid downstream erosion.

Implementation

General

The slope drain is applicable for any construction site where concentrated surface runoff can accumulate and must be conveyed down the slope in order to prevent erosion. The slope drain is effective because it prevents the stormwater from flowing directly down the slope by confining all the runoff into an enclosed pipe or channel. Due to the time lag between grading slopes and installation of permanent stormwater collection systems and slope stabilization measures, temporary provisions to intercept runoff are sometimes necessary. Particularly in steep terrain, slope drains can protect unstabilized areas from erosion.

Installation

The slope drain may be a rigid pipe, such as corrugated metal, a flexible conduit, or a lined terrace drain with the inlet placed on the top of a slope and the outlet at the bottom of the slope. This BMP typically is used in combination with a diversion control, such as an earth dike or drainage swale at the top of the slope.

The following criteria must be considered when siting slope drains.

- Permanent structures included in the project plans can often serve as construction BMPs if implemented early. However, the permanent structure must meet or exceed the criteria for the temporary structure.
- Inlet structures must be securely entrenched and compacted to avoid severe gully erosion.
- Slope drains must be securely anchored to the slope and must be adequately sized to carry the capacity of the design storm and associated forces.
- Outlets must be stabilized with riprap, concrete or other type of energy dissipator, or directed into a stable sediment trap or basin. See EC-10, Velocity Dissipation Devices.
- Debris racks are recommended at the inlet. Debris racks located several feet upstream of the inlet can usually be larger than racks at the inlet, and thus provide enhanced debris protection and less plugging.
- Safety racks are also recommended at the inlet and outlet of pipes where children or animals could become entrapped.
- Secure inlet and surround with dikes to prevent gully erosion and anchor pipe to slope.
- When using slope drains, limit drainage area to 10 acres per pipe. For larger areas, use a rock lined channel or a series of pipes.

- Size to convey at least the peak flow of a 10-year storm. The design storm is conservative due to the potential impact of system failures.
- Maximum slope generally limited to 2:1 (H:V) as energy dissipation below steeper slopes is difficult.
- Direct surface runoff to slope drains with interceptor dikes. See BMP EC-9, Earth Dikes and Drainage Swales. Top of interceptor dikes should be 12 in. higher than the top of the slope drain.
- Slope drains can be placed on or buried underneath the slope surface.
- Recommended materials include both metal and plastic pipe, either corrugated or smooth wall. Concrete pipe can also be used.
- When installing slope drains:
  - Install slope drains perpendicular to slope contours.
  - Compact soil around and under entrance, outlet, and along length of pipe.
  - Securely anchor and stabilize pipe and appurtenances into soil.
  - Check to ensure that pipe connections are watertight.
  - Protect area around inlet with filter cloth. Protect outlet with riprap or other energy dissipation device. For high energy discharges, reinforce riprap with concrete or use reinforced concrete device.
  - Protect outlet of slope drains using a flared end section when outlet discharges to a flexible energy dissipation device.
  - A flared end section installed at the inlet will improve flow into the slope drain and prevent erosion at the pipe entrance. Use a flared end section with a 6 in. minimum toe plate to help prevent undercutting. The flared section should slope towards the pipe inlet.

Design and Layout

The capacity for temporary drains should be sufficient to convey at least the peak runoff from a 10-year rainfall event. The pipe size may be computed using the Rational Method or a method established by the local municipality. Higher flows must be safely stored or routed to prevent any offsite concentration of flow and any erosion of the slope. The design storm is purposely conservative due to the potential impacts associated with system failures.

As a guide, temporary pipe slope drains should not be sized smaller than shown in the following table:

Minimum Pipe Diameter (Inches)	Maximum Drainage Area (Acres)
12	1.0
18	3.0
21	5.0
24	7.0
30	10.0

Larger drainage areas can be treated if the area can be subdivided into areas of 10 acres or less and each area is treated as a separate drainage. Drainage areas exceeding 10 acres must be designed by a Registered Civil Engineer and approved by the agency that issued the grading permit.

Materials:

Soil type, rainfall patterns, construction schedule, local requirements, and available supply are some of the factors to be considered when selecting materials. The following types of slope drains are commonly used:

- **Rigid Pipe:** This type of slope drain is also known as a pipe drop. The pipe usually consists of corrugated metal pipe or rigid plastic pipe. The pipe is placed on undisturbed or compacted soil and secured onto the slope surface or buried in a trench. Concrete thrust blocks must be used when warranted by the calculated thrust forces. Collars should be properly installed and secured with metal strappings or watertight collars.

- **Flexible Pipe**: The flexible pipe slope drain consists of a flexible tube of heavy-duty plastic, rubber, or composite material. The tube material is securely anchored onto the slope surface. The tube should be securely fastened to the metal inlet and outlet conduit sections with metal strappings or watertight collars.

- **Section Downdrains**: The section downdrain consists of pre-fabricated, section conduit of half round or third round material. The sectional downdrain performs similar to a flume or chute. The pipe must be placed on undisturbed or compacted soil and secured into the slope.

- **Concrete-lined Terrace Drain:** This is a concrete channel for draining water from a terrace on a slope to the next level. These drains are typically specified as permanent structures and, if installed early, can serve as slope drains during construction, which should be designed according to local drainage design criteria.

Costs

- Cost varies based on pipe selection and selected outlet protection.

Corrugated Steel Pipes, Per Foot	
Size	Supplied and Installed Cost (No Trenching Included)
12"	$19.60 per LF
15"	$22.00
18"	$26.00
24"	$32.00
30"	$50.00
PVC Pipes, Per Foot	
Size	Supplied and Installed Cost (No Trenching Included)
12"	$24.50
14"	$49.00
16"	$51.00
18"	$54.00
20"	$66.00
24"	$93.00
30"	$130.00

Inspection and Maintenance

- Inspect BMPs prior to forecast rain, daily during extended rain events, after rain events, weekly during the rainy season, and at two-week intervals during the non-rainy season.
- Inspect BMPs subjected to non-stormwater discharges daily while non-stormwater discharges occur.
- Inspect outlet for erosion and downstream scour. If eroded, repair damage and install additional energy dissipation measures. If downstream scour is occurring, it may be necessary to reduce flows being discharged into the channel unless other preventative measures are implemented.
- Insert inlet for clogging or undercutting. Remove debris from inlet to maintain flows. Repair undercutting at inlet and if needed, install flared section or rip rap around the inlet to prevent further undercutting.
- Inspect pipes for leakage. Repair leaks and restore damaged slopes.
- Inspect slope drainage for accumulations of debris and sediment.
- Remove built up sediment from entrances and outlets as required. Flush drains if necessary; capture and settle out sediment from discharge.

- Make sure water is not ponding onto inappropriate areas (e.g., active traffic lanes, material storage areas, etc.).
- Pipe anchors must be checked to ensure that the pipe remains anchored to the slope. Install additional anchors if pipe movement is detected.

References

Draft – Sedimentation and Erosion Control, An Inventory of Current Practices, U.S.E.P.A., April 1990.

National Association of Home Builders (NAHB). Stormwater Runoff & Nonpoint Source Pollution Control Guide for Builders and Developers. National Association of Home Builders, Washington, D.C., 1995

National Management Measures to Control Nonpoint Source Pollution from Urban Areas, United States Environmental Protection Agency, 2002.

Stormwater Quality Handbooks Construction Site Best Management Practices (BMPs) Manual, State of California Department of Transportation (Caltrans), November 2000.

Stormwater Management of the Puget Sound Basin, Technical Manual, Publication #91-75, Washington State Department of Ecology, February 1992.

Water Quality Management Plan for the Lake Tahoe Region, Volume II, Handbook of Management Practices, Tahoe Regional Planning Agency, November 1988.

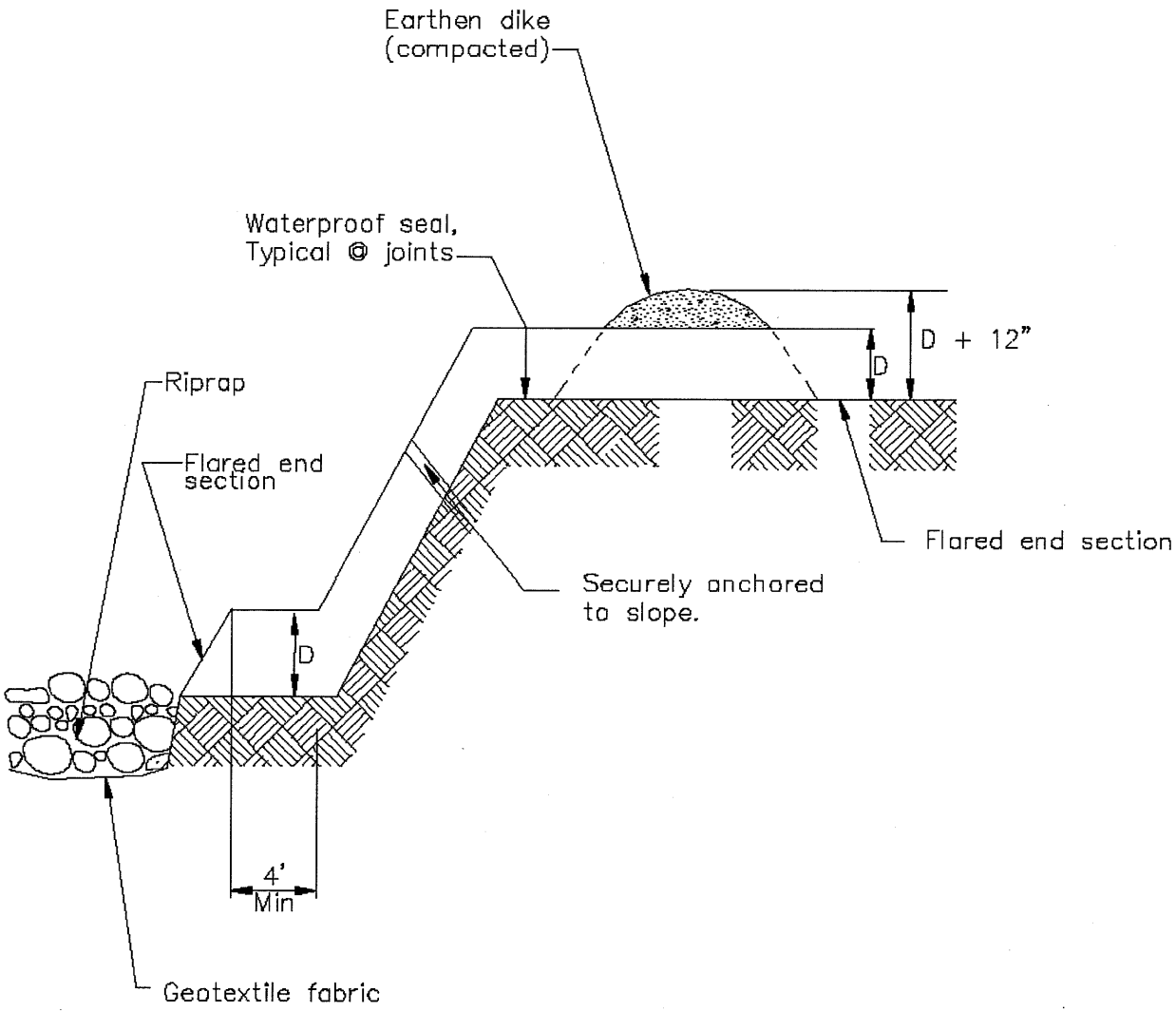

TYPICAL SLOPE DRAIN
NOT TO SCALE

Polyacrylamide EC-13

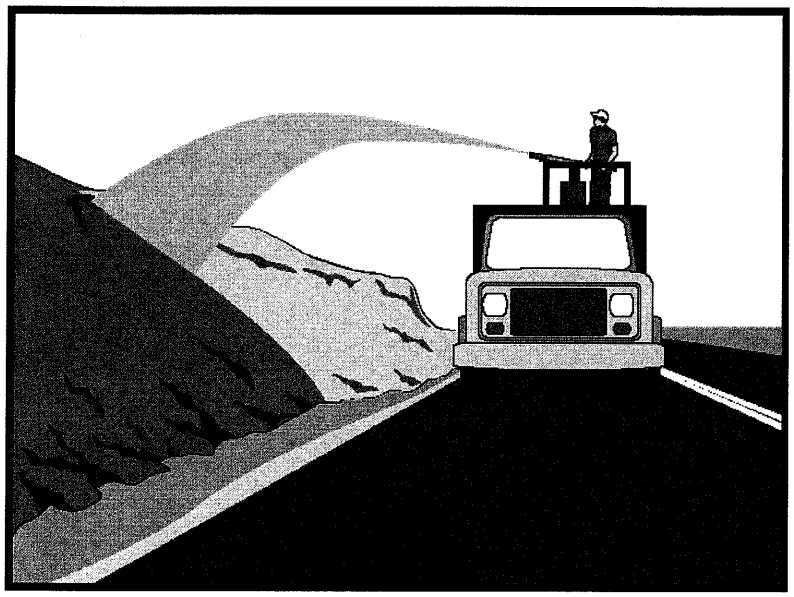

Objectives

EC	Erosion Control
SE	Sediment Control
TR	Tracking Control
WE	Wind Erosion Control
NS	Non-Stormwater Management Control
WM	Waste Management and Materials Pollution Control

Legend:

☑ **Primary Objective**

☒ **Secondary Objective**

Targeted Constituents

Sediment
Nutrients
Trash
Metals
Bacteria
Oil and Grease
Organics

Potential Alternatives

None

Description and Purpose

Polyacrylamide (PAM) is a chemical that can be applied to disturbed oils at construction sites to reduce erosion and improve settling of suspended sediment.

PAM increases the soil's available pore volume, thus increasing infiltration and reducing the quantity of stormwater runoff that can cause erosion. Suspended sediments from PAM treated soils exhibit increased flocculation over untreated soils. The increased flocculation aids in their deposition, thus reducing stormwater runoff turbidity and improving water quality.

Suitable Applications

PAM is suitable for use on disturbed soil areas that discharge to a sediment trap or sediment basin. PAM is typically used in conjunction with other BMPs to increase their performance.

PAM can be applied to the following areas:

- Rough graded soils that will be inactive for a period of time.
- Final graded soils before application of final stabilization (e.g., paving, planting, mulching).
- Temporary haul roads prior to placement of crushed rock surfacing.
- Compacted soil road base.
- Construction staging, materials storage, and layout areas.

CASQA
CALIFORNIA STORMWATER QUALITY ASSOCIATION

- Soil stockpiles.
- Areas that will be mulched.

Limitations

- There is limited experience in California with use of PAM for erosion and sediment control.
- PAM shall not be directly applied to water or allowed to enter a water body.
- Do not use PAM on a slope that flows into a water body without passing through a sediment trap or sediment basin.
- PAM will work when applied to saturated soil but is not as effective as applications to dry or damp soil.
- Some PAMs are more toxic and carcinogenic than others. Only the most environmentally safe PAM products should be used.
- The specific PAM copolymer formulation must be anionic. **Cationic PAM shall not be used in any application because of known aquatic toxicity problems**. Only the highest drinking water grade PAM, certified for compliance with ANSI/NSF Standard 60 for drinking water treatment, will be used for soil applications.
- PAM designated for erosion and sediment control should be "water soluble" or "linear" or "non-cross linked".
- A sampling and analysis plan must be incorporated into the SWPPP as PAM may be considered to be a source of non-visible pollutants.

Implementation

General

PAM shall be used in accordance with the following general guidance:

- Pam shall be used in conjunction with other BMPs and not in place of other BMPs, including both erosion controls and sediment controls.
- Stormwater runoff from PAM treated soils should pass through a sediment control BMP prior to discharging to surface waters.
  - When the total drainage area is greater than or equal to 5 acres, PAM treated areas shall drain to a sediment basin.
  - Areas less than 5 acres shall drain to sediment control BMPs, such as a sediment trap, or a minimum of 3 check dams per acre. The total number of check dams used shall be maximized to achieve the greatest amount of settlement of sediment prior to discharging from the site. Each check dam shall be spaced evenly in the drainage channel. Through which stormwater flows are discharged off site.
- Do not add PAM to water discharging from site.

- On PAM treated sites, the use of silt fence and fiber rolls shall be maximized to limit the discharges of sediment to sediment traps and sediment basins.
- All areas not being actively worked one should be covered and protected from rainfall. PAM should not be the only cover BMP used.
- PAM can be applied to wet soil, but dry soil is preferred due to less sediment loss.
- Keep the granular PAM supply out of the sun. Granular PAM loses its effectiveness in three months after exposure to sunlight and air.
- Proper application and re-application plans are necessary to ensure total effectiveness of PAM usage.
- PAM, combined with water, is very slippery and can be a safety hazard. Care must be taken to prevent spills of PAM powder onto paved surfaces. During an application of PAM, prevent over spray from reaching pavement, as pavement will become slippery. If PAM powder gets on skin or clothing, wipe it off with a rough towel rather than washing with water this only makes cleanup messier and longer.
- Recent high interest in PAM has resulted in some entrepreneurial exploitation of the term "polymer". All PAMs are polymer, but not all polymers are PAM, and not all PAM products comply with ANSI/NSF Standard 60. PAM use shall be reviewed and approved by the local permitting authority.
- The PAM anionic charge density may vary from 2-30%; a value of 18% is typical. Studies conducted by the United States Department of Agriculture (USDA)/ Agricultural Research Service (ARS) demonstrated that soil stabilization was optimized by using very high molecular weight (12-15 mg/mole), highly anionic (>20% hydrolosis) PAM.
- PAM tackifiers are available and being used in place of guar and alpha plantago. Typically, PAM tackifiers should be used at a rate of no more than 0.5-1 lb per 1,000 gallons of water in hydro mulch machine. Some tackifier product instructions say to use at a rate of 3-5 lbs per acre, which can be too much. In addition, pump problems can occur at higher rates due to increased viscosity.

Preferred Application Method

PAM may be applied in dissolved form with water, or it may be applied in dry, granular, or powered form. The preferred application method is the dissolved form.

PAM is to be applied at a maximum rate of ½ pound PAM per 1000 gallons water per 1 acre of bare soil. Table 1 and Figure 1 can be used to determine the PAM and water application rate for a disturbed soil area. Higher concentrations of PAM **do not** provide any additional effectiveness.

Table 1 PAM and Water Application Rates

Disturbed Area (acre)	PAM (lbs)	Water (gallons)
0.50	0.25	500
1.00	0.50	1,000
1.50	0.75	1,500
2.00	1.00	2,000
2.50	1.25	2,500
3.00	1.50	3,000
3.50	1.75	3,500
4.00	2.00	4,000
4.50	2.25	4,500
5.00	2.50	5,000

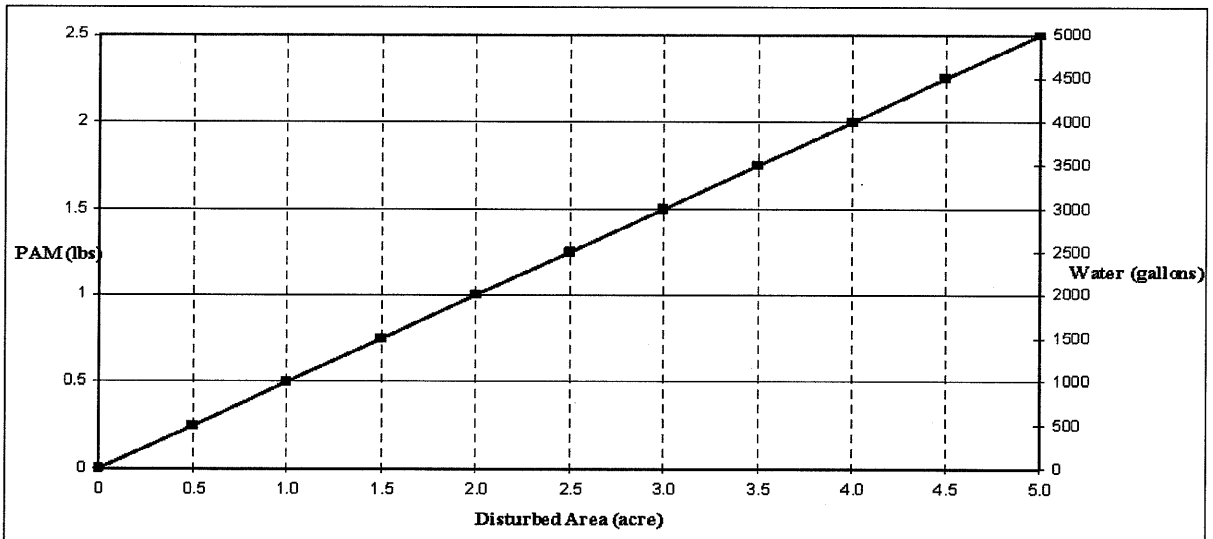

Figure 1 - PAM and Water Application Rates

- Pre-measure the area where PAM is to be applied and calculate the amount of product and water necessary to provide coverage at the specified application rate (1/2 pound PAM/1000 gallons/acre).
- PAM has infinite solubility in water, but dissolves very slowly. Dissolve pre-measured dry granular PAM with a known quantity of clean water in a bucket several hours or overnight. Mechanical mixing will help dissolve the PAM. Always add PAM to water – not water to PAM.

- Pre-fill the water truck about 1/8 full with water. The water does not have to be potable, but it must have relatively low turbidity – in the range of 20 NTU or less.
- Add the dissolved PAM and water mixture to the truck.
- Fill the water truck to specified volume for the amount of PAM to be applied.
- Spray the PAM/water mixture onto dry soil until the soil surface is uniformly and completely wetted.

Alternate Application Method

PAM may also be applied as a powder at the rate of 5 lbs per acre. This must be applied on a day that is dry. For areas less than 5-10 acres, a hand held "organ grinder" fertilizer spreader set to the smallest setting will work. Tractor mounted spreaders will work for larger areas.

Costs

- PAM: $1.30 - $5.50/lb (material cost only).

Inspection and Maintenance

- Inspect BMPs prior to forecast rain, daily during extended rain events, after rain events, weekly during the rainy season, and at two-week intervals during the non-rainy season.
- Areas where erosion is evident should be repaired and BMPs re-applied as soon as possible. Care should be exercised to minimize the damage to protected areas while making repairs, as any area damaged will require re-application of BMPs.
- PAM must be reapplied on actively worked areas after a 48-hour period if PAM is to remain effective.
- Reapplication is not required unless PAM treated soil is disturbed or unless turbidity levels show the need for an additional application.
- If PAM treated soil is left undisturbed a reapplication may be necessary after two months.
- More PAM applications may be required for steep slopes, silty and clayey soils (USDA Classification Type "C" and "D" soils), long grades, and high precipitation areas.
- When PAM is applied first to bare soil and then covered with straw, a reapplication may not be necessary for several months.
- Discharges from PAM treated areas must be monitored for non-visible pollutants.

References

Entry, J.A., and R.E. Sojka. Polyacrylamide Application to Soil Reduces the Movement of Microorganisms in Water. In 1999 Proceedings of the International Irrigation Show. Irrigation Associations, Orlando, FL, November, 1999.

National Management Measures to Control Nonpoint Source Pollution from Urban Areas, United States Environmental Protection Agency, 2002.

Stormwater Quality Handbooks Construction Site Best Management Practices (BMPs) Manual, State of California Department of Transportation (Caltrans), November 2000.

Sojka, R.E., and R.D. Lentz, eds. Managing Irrigation Induced Erosion and Infiltration with Polyacrylamide. In Proceedings from Conference held at College of Southern Idaho, Twin Falls, Idaho, University of Idaho Miscellaneous Publication No. 101-96, May, 1996

Stormwater Management Manual for Western Washington, Volume II – Construction Stormwater Pollution Prevention, Washington State Department of Ecology, August 2001.

Water Conservation Practices NS-1

Objectives

EC	Erosion Control	☒
SE	Sediment Control	☒
TR	Tracking Control	
WE	Wind Erosion Control	
NS	Non-Stormwater Management Control	☑
WM	Waste Management and Materials Pollution Control	

Legend:

☑ Primary Objective

☒ Secondary Objective

Targeted Constituents

Sediment	☑
Nutrients	
Trash	
Metals	
Bacteria	
Oil and Grease	
Organics	

Potential Alternatives

None

Description and Purpose

Water conservation practices are activities that use water during the construction of a project in a manner that avoids causing erosion and the transport of pollutants offsite. These practices can reduce or eliminate non-stormwater discharges.

Suitable Applications

Water conservation practices are suitable for all construction sites where water is used, including piped water, metered water, trucked water, and water from a reservoir.

Limitations

- None identified.

Implementation

- Keep water equipment in good working condition.
- Stabilize water truck filling area.
- Repair water leaks promptly.
- Washing of vehicles and equipment on the construction site is discouraged.
- Avoid using water to clean construction areas. If water must be used for cleaning or surface preparation, surface should be swept and vacuumed first to remove dirt. This will minimize amount of water required.

CASQA
CALIFORNIA STORMWATER QUALITY ASSOCIATION

- Direct construction water runoff to areas where it can soak into the ground or be collected and reused.
- Authorized non-stormwater discharges to the storm drain system, channels, or receiving waters are acceptable with the implementation of appropriate BMPs.
- Lock water tank valves to prevent unauthorized use.

Costs

The cost is small to none compared to the benefits of conserving water.

Inspection and Maintenance

- Inspect and verify that activity based BMPs are in place prior to the commencement of authorized non-stormwater discharges.
- Inspect BMPs subject to non-stormwater discharges daily while non-stormwater discharges are occuring.
- Repair water equipment as needed to prevent unintended discharges.
  - Water trucks
  - Water reservoirs (water buffalos)
  - Irrigation systems
  - Hydrant connections

References

Stormwater Quality Handbooks - Construction Site Best Management Practices (BMPs) Manual, State of California Department of Transportation (Caltrans), November 2000.

Dewatering Operations NS-2

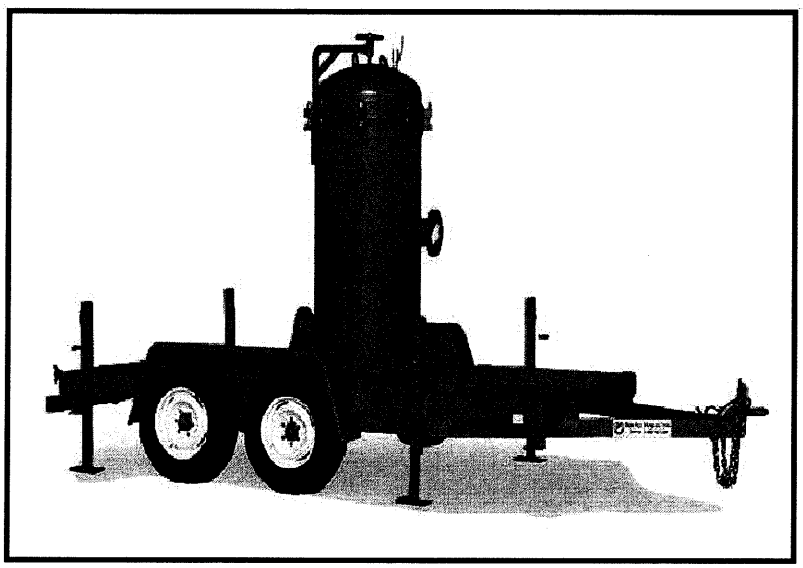

Objectives

EC	Erosion Control	
SE	Sediment Control	☒
TR	Tracking Control	
WE	Wind Erosion Control	
NS	Non-Stormwater Management Control	☑
WM	Waste Management and Materials Pollution Control	

Legend:

☑ **Primary Objective**

☒ **Secondary Objective**

Description and Purpose

Dewatering operations are practices that manage the discharge of pollutants when non-stormwater and accumulated precipitation must be removed from a work location so that construction work may be accomplished.

Suitable Applications

These practices are implemented for discharges of non-stormwater from construction sites. Non-stormwaters include, but are not limited to, groundwater, water from cofferdams, water diversions, and waters used during construction activities that must be removed from a work area.

Practices identified in this section are also appropriate for implementation when managing the removal of accumulated precipitation (stormwater) from depressed areas at a construction site.

Limitations

- Site conditions will dictate design and use of dewatering operations.
- The controls discussed in this best management practice (BMP) address sediment only.
- The controls detailed in this BMP only allow for minimal settling time for sediment particles. Use only when site conditions restrict the use of the other control methods.
- Dewatering operations will require, and must comply with, applicable local permits.

Targeted Constituents

Sediment	☑
Nutrients	
Trash	
Metals	
Bacteria	
Oil and Grease	☑
Organics	

Potential Alternatives

SE-5: Fiber Roll

SE-6: Gravel Bag Berm

SE-9: Straw Bale Barrier

CASQA
CALIFORNIA STORMWATER QUALITY ASSOCIATION

- Avoid dewatering discharges where possible by using the water for dust control, by infiltration, etc.

Implementation

- Dewatering non-stormwater cannot be discharged without prior notice to and approval from the Regional Water Quality Control Board (RWQCB) and local stormwater management agency. This includes stormwater that is co-mingled with groundwater or other non-stormwater sources. Once the discharge is allowed, appropriate BMPs must be implemented to ensure the discharge complies with all permit requirements and regional and watershed-specific requirements.

- RWQCB may require a separate NPDES permit prior to the dewatering discharge of non-stormwater. These permits will have specific testing, monitoring, and discharge requirements and can take significant time to obtain.

- The flow chart shown in Figure 1 should be utilized to guide dewatering operations.

- The owner will coordinate monitoring and permit compliance.

- Additional permits or permissions from other agencies may be required for dewatering cofferdams or diversions.

- Dewatering discharges must not cause erosion at the discharge point.

A variety of methods can be used to treat water during dewatering operations. Several devices are presented below and provide options to achieve sediment removal. The size of particles present in the sediment and Permit or receiving water limitations on sediment are key considerations for selecting sediment treatment option(s); in some cases, the use of multiple devices may be appropriate.

Sediment Basin (see also SE-2)

Description:

- A sediment basin is a temporary basin with a controlled release structure that is formed by excavation or construction of an embankment to detain sediment-laden runoff and allow sediment to settle out before discharging. Sediment basins are generally larger than Sediment Traps (SE-3).

Appropriate Applications:

- Effective for the removal of gravel, sand, silt, some metals that settle out with the sediment, and trash.

Implementation:

- Excavation and construction of related facilities is required.

- Temporary sediment basins must be fenced if safety is a concern.

- Outlet protection is required to prevent erosion at the outfall location.

Maintenance:

- Maintenance is required for safety fencing, vegetation, embankment, inlet and outfall structures, as well as other features.
- Removal of sediment is required when the storage volume is reduced by one-half.

Sediment Trap (See also SE-3)

Description:

- A sediment trap is a temporary basin formed by excavation and/or construction of an earthen embankment across a waterway or low drainage area to detain sediment-laden runoff and allow sediment to settle out before discharging. Sediment traps are generally smaller than Sediment Basins (SE-2).

Appropriate Applications:

Effective for the removal of large and medium sized particles (sand and gravel) and some metals that settle out with the sediment.

Implementation:

- Excavation and construction of related facilities is required.
- Trap inlets should be located to maximize the travel distance to the trap outlet.
- Use rock or vegetation to protect the trap outlets against erosion.

Maintenance:

- Maintenance is required for vegetation, embankment, inlet and outfall structures, as well as other features.
- Removal of sediment is required when the storage volume is reduced by one-third.

Weir Tanks

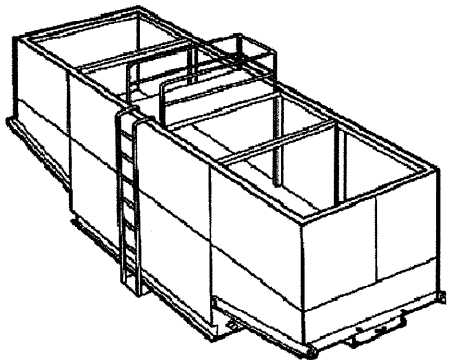

Description:

- A weir tank separates water and waste by using weirs. The configuration of the weirs (over and under weirs) maximizes the residence time in the tank and determines the waste to be removed from the water, such as oil, grease, and sediments.

Appropriate Applications:

- The tank removes trash, some settleable solids (gravel, sand, and silt), some visible oil and grease, and some metals (removed with sediment). To achieve high levels of flow, multiple tanks can be used in parallel. If additional treatment is desired, the tanks can be placed in series or as pre-treatment for other methods.

Implementation:

- Tanks are delivered to the site by the vendor, who can provide assistance with set-up and operation.
- Tank size will depend on flow volume, constituents of concern, and residency period required. Vendors should be consulted to appropriately size tank.

Maintenance:

- Periodic cleaning is required based on visual inspection or reduced flow.
- Oil and grease disposal must be by licensed waste disposal company.

Dewatering Tanks

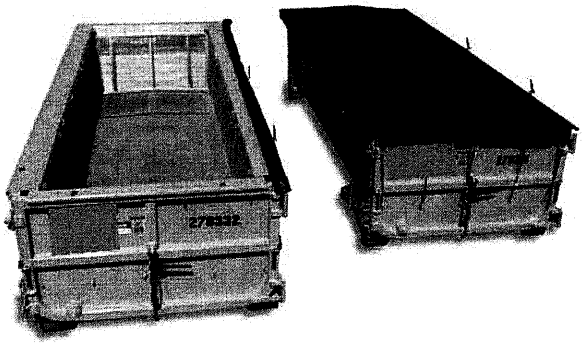

Description:

- A dewatering tank removes debris and sediment. Flow enters the tank through the top, passes through a fabric filter, and is discharged through the bottom of the tank. The filter separates the solids from the liquids.

Appropriate Applications:

- The tank removes trash, gravel, sand, and silt, some visible oil and grease, and some metals (removed with sediment). To achieve high levels of flow, multiple tanks can be used in parallel. If additional treatment is desired, the tanks can be placed in series or as pre-treatment for other methods.

Implementation:

- Tanks are delivered to the site by the vendor, who can provide assistance with set-up and operation.
- Tank size will depend on flow volume, constituents of concern, and residency period required. Vendors should be consulted to appropriately size tank.

Maintenance:

- Periodic cleaning is required based on visual inspection or reduced flow.
- Oil and grease disposal must be by licensed waste disposal company.

Gravity Bag Filter

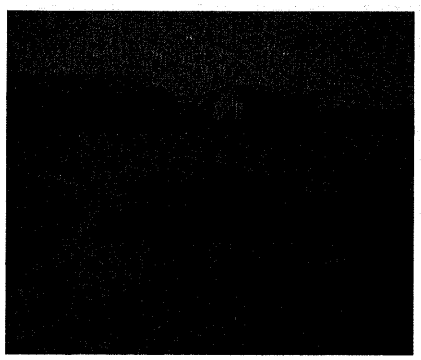

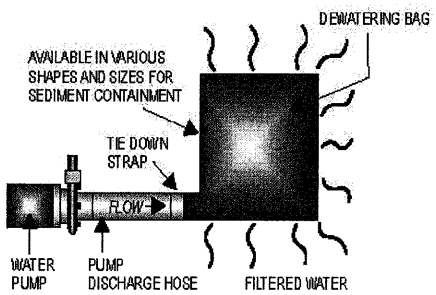

Description:

- A gravity bag filter, also referred to as a dewatering bag, is a square or rectangular bag made of non-woven geotextile fabric that collects sand, silt, and fines.

Appropriate Applications:

- Effective for the removal of sediments (gravel, sand, and silt). Some metals are removed with the sediment.

Implementation:

- Water is pumped into one side of the bag and seeps through the bottom and sides of the bag.
- A secondary barrier, such as a rock filter bed or straw/hay bale barrier, is placed beneath and beyond the edges of the bag to capture sediments that escape the bag.

Maintenance:

- Inspection of the flow conditions, bag condition, bag capacity, and the secondary barrier is required.
- Replace the bag when it no longer filters sediment or passes water at a reasonable rate.
- The bag is disposed of offsite.

Sand Media Particulate Filter

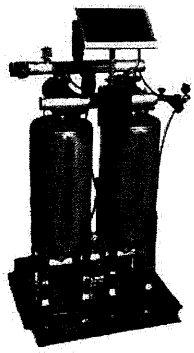

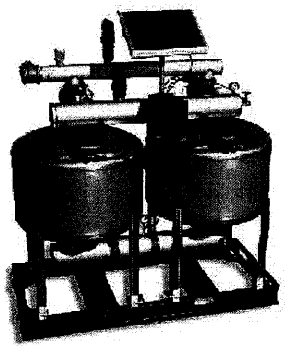

Description:

- Water is treated by passing it through canisters filled with sand media. Generally, sand filters provide a final level of treatment. They are often used as a secondary or higher level of treatment after a significant amount of sediment and other pollutants have been removed using other methods.

Appropriate Applications:

- Effective for the removal of trash, gravel, sand, and silt and some metals, as well as the reduction of biochemical oxygen demand (BOD) and turbidity.
- Sand filters can be used for stand-alone treatment or in conjunction with bag and cartridge filtration if further treatment is required.
- Sand filters can also be used to provide additional treatment to water treated via settling or basic filtration.

Implementation:

- The filters require delivery to the site and initial set up. The vendor can provide assistance with installation and operation.

Maintenance:

- The filters require regular service to monitor and maintain the level of the sand media. If subjected to high loading rates, filters can plug quickly.
- Venders generally provide data on maximum head loss through the filter. The filter should be monitored daily while in use, and cleaned when head loss reaches target levels.
- If cleaned by backwashing, the backwash water may need to be hauled away for disposal, or returned to the upper end of the treatment train for another pass through the series of dewatering BMPs.

Pressurized Bag Filter

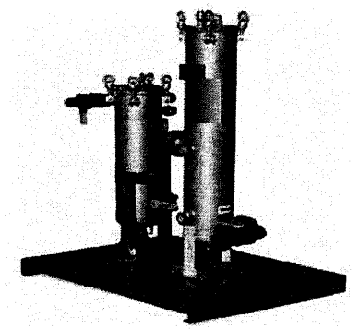

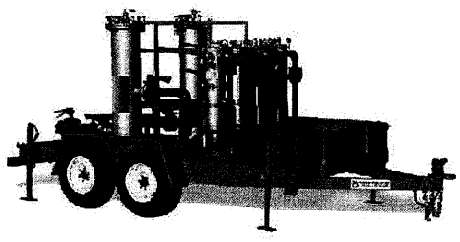

Description:

- A pressurized bag filter is a unit composed of single filter bags made from polyester felt material. The water filters through the unit and is discharged through a header. Vendors provide bag filters in a variety of configurations. Some units include a combination of bag filters and cartridge filters for enhanced contaminant removal.

Appropriate Applications:

- Effective for the removal of sediment (sand and silt) and some metals, as well as the reduction of BOD, turbidity, and hydrocarbons. Oil absorbent bags are available for hydrocarbon removal.

- Filters can be used to provide secondary treatment to water treated via settling or basic filtration.

Implementation:

- The filters require delivery to the site and initial set up. The vendor can provide assistance with installation and operation.

Maintenance:

- The filter bags require replacement when the pressure differential equals or exceeds the manufacturer's recommendation.

Cartridge Filter

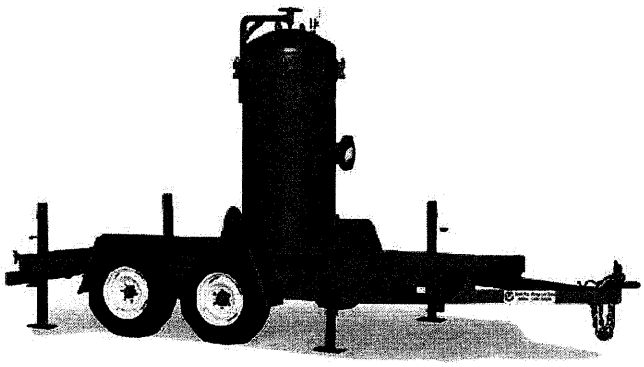

Description:

- Cartridge filters provide a high degree of pollutant removal by utilizing a number of individual cartridges as part of a larger filtering unit. They are often used as a secondary or higher (polishing) level of treatment after a significant amount of sediment and other pollutants are removed. Units come with various cartridge configurations (for use in series with bag filters) or with a larger single cartridge filtration unit (with multiple filters within).

Appropriate Applications:

- Effective for the removal of sediment (sand, silt, and some clays) and metals, as well as the reduction of BOD, turbidity, and hydrocarbons. Hydrocarbons can effectively be removed with special resin cartridges.
- Filters can be used to provide secondary treatment to water treated via settling or basic filtration.

Implementation:

- The filters require delivery to the site and initial set up. The vendor can provide assistance.

Maintenance:

- The cartridges require replacement when the pressure differential equals or exceeds the manufacturer's recommendation.

Costs

- Sediment controls are low to high cost measures depending on the dewatering system that is selected. Pressurized filters tend to be more expensive than gravity settling, but are often more effective. Simple tanks are generally rented on a long-term basis (one or more months) and can range from $360 per month for a 1,000 gallon tank to $2,660 per month for a 10,000 gallon tank. Mobilization and demobilization costs vary considerably.

Inspection and Maintenance

- Inspect and verify that activity-based BMPs are in place prior to the commencement of associated activities. While activities associated with the BMP are under way, inspect weekly during the rainy season and at two-week intervals in the non-rainy season to verify continued BMP implementation.

- Inspect BMPs subject to non-stormwater discharges daily while non-stormwater discharges occur.
- Unit-specific maintenance requirements are included with the description of each unit.
- Sediment removed during the maintenance of a dewatering device may be either spread onsite and stabilized, or disposed of at a disposal site as approved by the owner.
- Sediment that is commingled with other pollutants must be disposed of in accordance with all applicable laws and regulations and as approved by the owner.

References

Blueprint for a Clean Bay: Best Management Practices to Prevent Stormwater Pollution from Construction Related Activities; Santa Clara Valley Nonpoint Source Pollution Control Program, 1995.

Stormwater Quality Handbooks - Construction Site Best Management Practices (BMPs) Manual, State of California Department of Transportation (Caltrans), November 2000.

Stormwater Management for Construction Activities, Developing Pollution Prevention Plans and Best Management Practices, EPA 832-R-92005; USEPA, April 1992.

Labor Surcharge & Equipment Rental Rates, April 1, 2002 through March 31, 2003, California Department of Transportation (Caltrans).

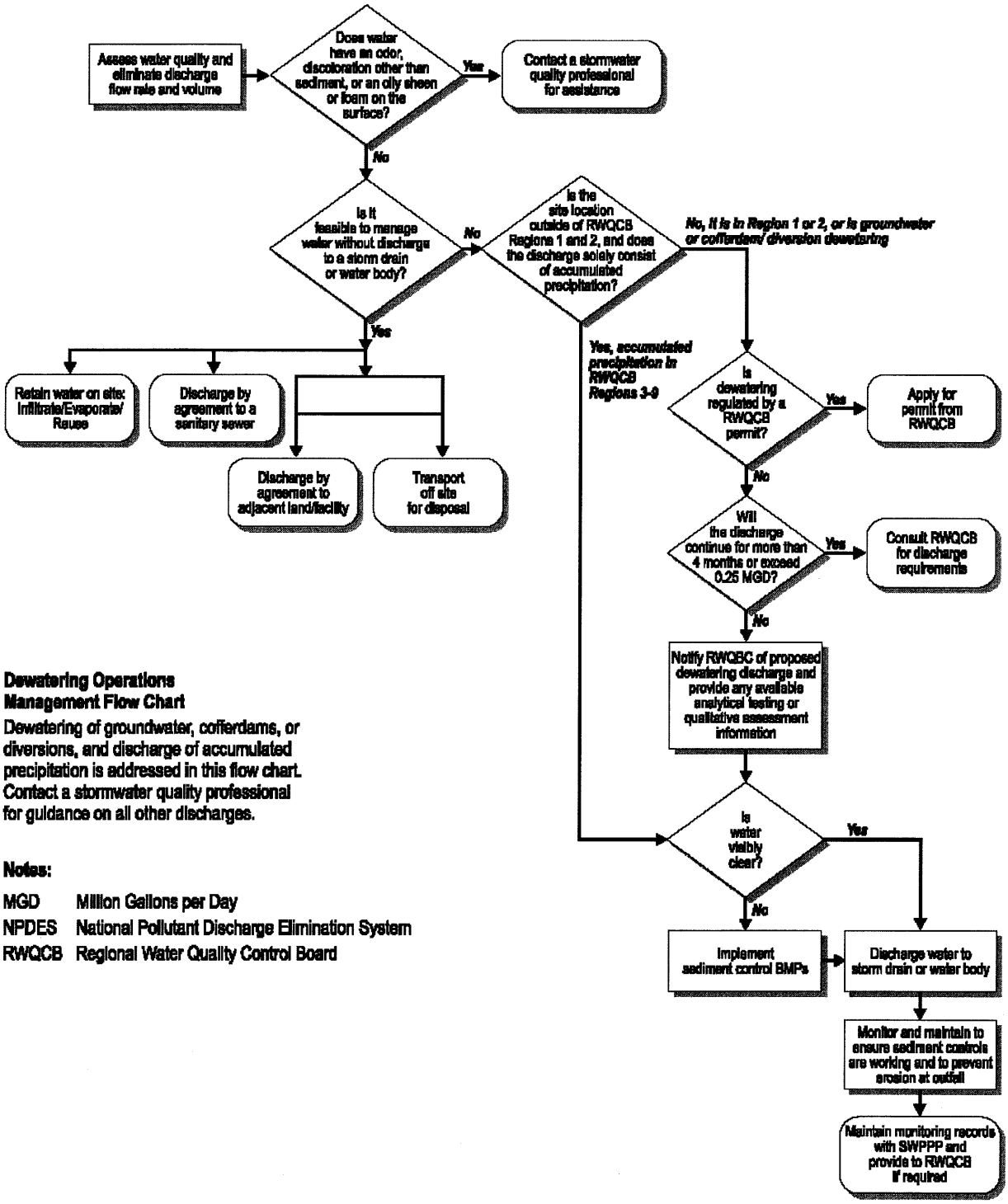

Dewatering Operations Management Flow Chart

Dewatering of groundwater, cofferdams, or diversions, and discharge of accumulated precipitation is addressed in this flow chart. Contact a stormwater quality professional for guidance on all other discharges.

Notes:

MGD Million Gallons per Day
NPDES National Pollutant Discharge Elimination System
RWQCB Regional Water Quality Control Board

Figure 1
Operations Flow Chart

Paving and Grinding Operations NS-3

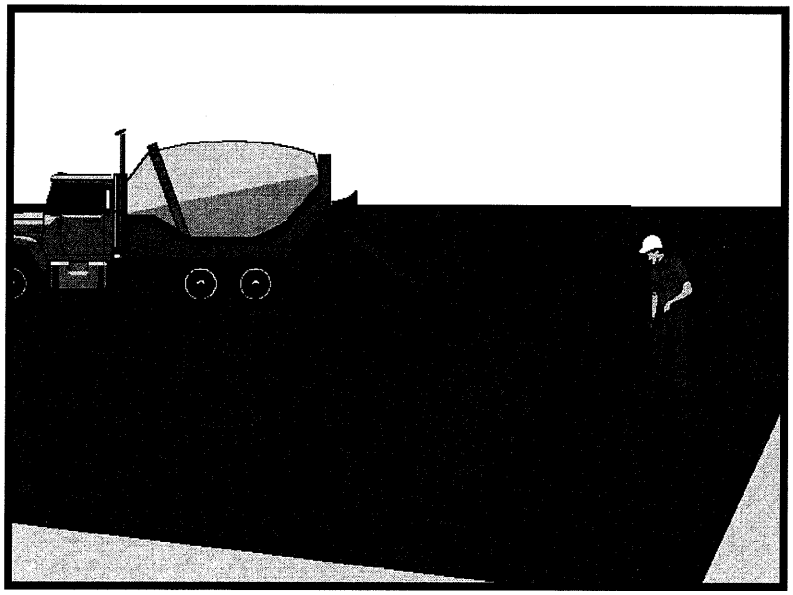

Objectives

EC	Erosion Control	
SE	Sediment Control	
TR	Tracking Control	
WE	Wind Erosion Control	
NS	Non-Stormwater Management Control	☑
WM	Waste Management and Materials Pollution Control	☒

Legend:

☑ **Primary Objective**

☒ **Secondary Objective**

Targeted Constituents

Sediment	☑
Nutrients	
Trash	
Metals	
Bacteria	
Oil and Grease	☑
Organics	

Potential Alternatives

None

Description and Purpose

Prevent or reduce the discharge of pollutants from paving operations, using measures to prevent runon and runoff pollution, properly disposing of wastes, and training employees and subcontractors.

Suitable Applications

These procedures are implemented where paving, surfacing, resurfacing, or sawcutting, may pollute stormwater runoff or discharge to the storm drain system or watercourses.

Limitations

- Finer solids are not effectively removed by filtration systems.
- Paving opportunities may be limited during wet weather.

Implementation

General

- Avoid paving during the wet season when feasible.
- Reschedule paving and grinding activities if rain is in the forecast.
- Train employees and sub-contractors in pollution prevention and reduction.
- Store materials away from drainage courses to prevent stormwater runon (see WM-1, Material Delivery and Storage).

CASQA
CALIFORNIA STORMWATER QUALITY ASSOCIATION

- Protect drainage courses, particularly in areas with a grade, by employing BMPs to divert runoff or to trap and filter sediment.
- If paving involves an onsite mixing plant, follow the stormwater permitting requirements for industrial activities.
- Stockpile material removed from roadways away from drain inlets, drainage ditches, and watercourses, These materials should be stored consistent with WM-3, Stockpile Management.
- Disposal of PCC and AC waste should be in conformance with WM-8, Concrete Waste Management.

Saw Cutting, Grinding, and Pavement Removal

- Shovel or vacuum saw-cut slurry and remove from site. Cover or barricade storm drains during saw cutting to contain slurry.
- When paving involves AC, the following steps should be implemented to prevent the discharge of grinding residue, uncompacted or loose AC, tack coats, equipment cleaners, or unrelated paving materials:
  - AC grindings, pieces, or chunks used in embankments or shoulder backing must not be allowed to enter any storm drains or watercourses. Install silt fence until structure is stabilized or permanent controls are in place. Examples of temporary perimeter controls can be found in EC-9, Earth Dikes and Drainage Swales; SE-1, Silt Fence; or SE-5, Fiber Rolls.
  - Collect and remove all broken asphalt and recycle when practical. Old or spilled asphalt must be recycled or disposed.
  - Any AC chunks and pieces used in embankments must be placed above the water table and covered by at least 1 ft of material.
- Do not allow saw-cut slurry to enter storm drains or watercourses. Residue from grinding operations should be picked up by means of a vacuum attachment to the grinding machine, should not be allowed to flow across the pavement, and should not be left on the surface of the pavement. See also WM-8, Concrete Waste Management, and WM-10, Liquid Waste Management.
- Dig out activities should not be conducted in the rain.
- Collect dig out material by mechanical or manual methods. This material may be recycled for use as shoulder backing or base material.
- If dig out material cannot be recycled, transport the material back to an approved storage site.

Asphaltic Concrete Paving

- If paving involves asphaltic cement concrete, follow these steps:

- Do not allow sand or gravel placed over new asphalt to wash into storm drains, streets, or creeks. Vacuum or sweep loose sand and gravel and properly dispose of this waste by referring to WM-5, Solid Waste Management.

- Old asphalt must be disposed of properly. Collect and remove all broken asphalt from the site and recycle whenever possible.

Portland Cement Concrete Paving

- Do not wash sweepings from exposed aggregate concrete into a storm drain system. Collect and return to aggregate base stockpile or dispose of properly.

- Allow aggregate rinse to settle. Then, either allow rinse water to dry in a temporary pit as described in WM-8, Concrete Waste Management, or pump the water to the sanitary sewer if allowed by the local wastewater authority.

Sealing Operations

- During chip seal application and sweeping operations, petroleum or petroleum covered aggregate must not be allowed to enter any storm drain or water courses. Apply temporary perimeter controls until structure is stabilized.

- Drainage inlet structures and manholes should be covered with filter fabric during application of seal coat, tack coat, slurry seal, and fog seal.

- Seal coat, tack coat, slurry seal, or fog seal should not be applied if rainfall is predicted to occur during the application or curing period.

Paving Equipment

- Leaks and spills from paving equipment can contain toxic levels of heavy metals and oil and grease. Place drip pans or absorbent materials under paving equipment when not in use. Clean up spills with absorbent materials rather than burying. See NS-10, Vehicle and Equipment Maintenance, WM-4, Spill Prevention and Control, and WM-10, Liquid Waste Management.

- Substances used to coat asphalt transport trucks, and asphalt spreading equipment should not contain soap and should be non-foaming and non-toxic.

- Use only non-toxic substances to coat asphalt transport trucks and asphalt spreading equipment.

- Paving equipment parked onsite should be parked over plastic to prevent soil contamination.

- Clean asphalt coated equipment offsite whenever possible. When cleaning dry, hardened asphalt from equipment, manage hardened asphalt debris as described in WM-5, Solid Waste Management. Any cleaning onsite should follow NS-8, Vehicle and Equipment Cleaning.

Thermoplastic Striping

- Thermoplastic striper and pre-heater equipment shutoff valves should be inspected to ensure that they are working properly to prevent leaking thermoplastic from entering drain inlets, the stormwater drainage system, or watercourses.
- Pre-heaters should be filled carefully to prevent splashing or spilling of hot thermoplastic. Leave six inches of space at the top of the pre-heater container when filling thermoplastic to allow room for material to move when the vehicle is deadheaded.
- Do not pre-heat, transfer, or load thermoplastic near drain inlets or watercourses.
- Clean truck beds daily of loose debris and melted thermoplastic. When possible, recycle thermoplastic material.

Raised/Recessed Pavement Marker Application and Removal

- Do not transfer or load bituminous material near drain inlets, the stormwater drainage system, or watercourses.
- Melting tanks should be loaded with care and not filled to beyond six inches from the top to leave room for splashing when vehicle is deadheaded.
- When servicing or filling melting tanks, ensure all pressure is released before removing lids to avoid spills.
- On large-scale projects, use mechanical or manual methods to collect excess bituminous material from the roadway after removal of markers.

Costs

- All of the above are low cost measures.

Inspection and Maintenance

- Inspect and verify that activity-based BMPs are in place prior to the commencement of associated activities. While activities associated with the BMP are under way, inspect weekly during the rainy season and at two-week intervals in the non-rainy season to verify continued BMP implementation.
- Keep ample supplies of drip pans or absorbent materials onsite.
- Inspect and maintain machinery regularly to minimize leaks and drips.

References

Blueprint for a Clean Bay: Best Management Practices to Prevent Stormwater Pollution from Construction Related Activities; Santa Clara Valley Nonpoint Source Pollution Control Program, 1995.

Hot Mix Asphalt-Paving Handbook AC 150/5370-14, Appendix I, U.S. Army Corps of Engineers, July 1991.

Stormwater Quality Handbooks - Construction Site Best Management Practices (BMPs) Manual, State of California Department of Transportation (Caltrans), November 2000.

Clear Water Diversion NS-5

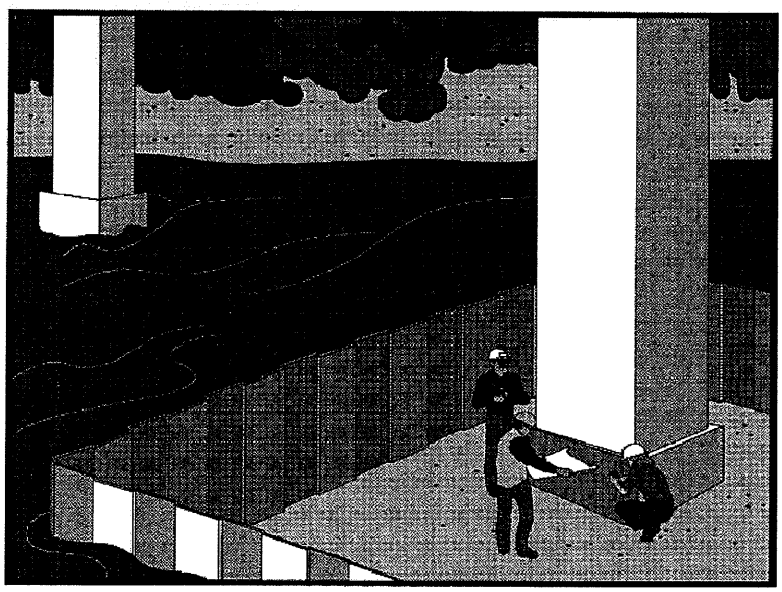

Objectives

EC	Erosion Control	
SE	Sediment Control	
TR	Tracking Control	
WE	Wind Erosion Control	
NS	Non-Stormwater Management Control	☑
WM	Waste Management and Materials Pollution Control	

Legend:

☑ **Primary Objective**

☒ **Secondary Objective**

Targeted Constituents

Sediment	☑
Nutrients	
Trash	
Metals	
Bacteria	
Oil and Grease	
Organics	

Potential Alternatives

None

Description and Purpose

Clear water diversion consists of a system of structures and measures that intercept clear surface water runoff upstream of a project, transport it around the work area, and discharge it downstream with minimal water quality degradation from either the project construction operations or the construction of the diversion. Clear water diversions are used in a waterway to enclose a construction area and reduce sediment pollution from construction work occurring in or adjacent to water. Structures commonly used as part of this system include diversion ditches, berms, dikes, slope drains, rock, gravel bags, wood, aqua barriers, cofferdams, filter fabric or turbidity curtains, drainage and interceptor swales, pipes, or flumes.

Suitable Applications

A clear water diversion is typically implemented where appropriate permits (1601 Agreement) have been secured and work must be performed in a flowing stream or water body.

- Clear water diversions are appropriate for isolating construction activities occurring within or near a water body such as streambank stabilization, or culvert, bridge, pier or abutment installation. They may also be used in combination with other methods, such as clear water bypasses and/or pumps.
- Pumped diversions are suitable for intermittent and low flow streams.
- Excavation of a temporary bypass channel, or passing the flow through a heavy pipe (called a "flume") with a trench

CASQA
CALIFORNIA STORMWATER QUALITY ASSOCIATION

excavated under it, is appropriate for the diversion of streams less than 20 ft wide, with flow rates less than 100 cfs.

- Clear water diversions incorporating clean washed gravel may be appropriate for use in salmonid spawning streams.

Limitations

- Diversion and encroachment activities will usually disturb the waterway during installation and removal of diversion structures.
- Installation may require Regional Water Quality Control Board (RWQCB) 401 Certification, U.S. Army Corps of Engineers 404 permit and approval by California Department of Fish and Game. If numerical-based water quality standards are mentioned in any of these and other related permits, testing and sampling may be required.
- Diversion and encroachment activities may constrict the waterway, which can obstruct flood flows and cause flooding or washouts. Diversion structures should not be installed without identifying potential impacts to the stream channel.
- Diversion or isolation activities are not appropriate in channels where there is insufficient stream flow to support aquatic species in the area dewatered as a result of the diversion.
- Diversion or isolation activities are inappropriate in deep water unless designed or reviewed by an engineer registered in California.
- Diversion or isolation activities should not completely dam stream flow.
- Dewatering and removal may require additional sediment control or water treatment. See NS-2, Dewatering Operations.
- Not appropriate if installation, maintenance, and removal of the structures will disturb sensitive aquatic species of concern.

Implementation

General

- Implement guidelines presented in NS-17, Streambank Stabilization to minimize impacts to streambanks.
- Where working areas encroach on flowing streams, barriers adequate to prevent the flow of muddy water into streams should be constructed and maintained between working areas and streams. During construction of the barriers, muddying of streams should be held to a minimum.
- Diversion structures must be adequately designed to accommodate fluctuations in water depth or flow volume due to tides, storms, flash floods, etc.
- Heavy equipment driven in wet portions of a water body to accomplish work should be completely clean of petroleum residue, and water levels should be below the fuel tanks, gearboxes, and axles of the equipment unless lubricants and fuels are sealed such that inundation by water will not result in discharges of fuels, oils, greases, or hydraulic fluids.

- Excavation equipment buckets may reach out into the water for the purpose of removing or placing fill materials. Only the bucket of the crane/ excavator/backhoe may operate in a water body. The main body of the crane/excavator/backhoe should not enter the water body except as necessary to cross the stream to access the work site.
- Stationary equipment such as motors and pumps located within or adjacent to a water body, should be positioned over drip pans.
- When any artificial obstruction is being constructed, maintained, or placed in operation, sufficient water should, at all times, be allowed to pass downstream to maintain aquatic life.
- Equipment should not be parked below the high water mark unless allowed by a permit.
- Disturbance or removal of vegetation should not exceed the minimum necessary to complete operations. Precautions should be taken to avoid damage to vegetation by people or equipment. Disturbed vegetation should be replaced with the appropriate erosion control measures.
- Riparian vegetation approved for trimming as part of the project should be cut off no lower than ground level to promote rapid re-growth. Access roads and work areas built over riparian vegetation should be covered by a sufficient layer of clean river run cobble to prevent damage to the underlying soil and root structure. The cobble should be removed upon completion of project activities.
- Drip pans should be placed under all vehicles and equipment placed on docks, barges, or other structures over water bodies when the vehicle or equipment is planned to be idle for more than 1 hour.
- Where possible, avoid or minimize diversion and encroachment impacts by scheduling construction during periods of low flow or when the stream is dry. Scheduling should also consider seasonal releases of water from dams, fish migration and spawning seasons, and water demands due to crop irrigation.
- Construct diversion structures with materials free of potential pollutants such as soil, silt, sand, clay, grease, or oil.

Temporary Diversions and Encroachments

- Construct diversion channels in accordance with EC-9, Earth Dikes and Drainage Swales.
- In high flow velocity areas, stabilize slopes of embankments and diversion ditches using an appropriate liner, in accordance with EC-7, Geotextiles and Mats, or use rock slope protection.
- Where appropriate, use natural streambed materials such as large cobbles and boulders for temporary embankment and slope protection, or other temporary soil stabilization methods.
- Provide for velocity dissipation at transitions in the diversion, such as the point where the stream is diverted to the channel and the point where the diverted stream is returned to its natural channel. See also EC-10, Velocity Dissipation Devices.

Temporary Dry Construction Areas

- When dewatering behind temporary structures to create a temporary dry construction area, such as cofferdams, pass pumped water through a sediment-settling device, such as a portable tank or settling basin, before returning water to the water body. See also NS-2, Dewatering Operations.

- Any substance used to assemble or maintain diversion structures, such as form oil, should be non-toxic and non-hazardous.

- Any material used to minimize seepage underneath diversion structures, such as grout, should be non-toxic, non-hazardous, and as close to a neutral pH as possible.

Comparison of Diversion and Isolation Techniques:

- Gravel bags are relatively inexpensive, but installation and removal can be labor intensive. It is also difficult to dewater the isolated area. Sandbags should not be used for this technique in rivers or streams, as sand should never be put into or adjacent to a stream, even if encapsulated in geotextile.

- Gravel Bag Berms (SE-6) used in conjunction with an impermeable membrane are cost effective, and can be dewatered relatively easily. If spawning gravel is used, the impermeable membrane can be removed from the stream, and the gravel can be spread out and left as salmonid spawning habitat if approved in the permit. Only clean, washed gravel should be used for both the gravel bag and gravel berm techniques.

- Cofferdams are relatively expensive, but frequently allow full dewatering. Also, many options now available are relatively easy to install.

- Sheet pile enclosures are a much more expensive solution, but do allow full dewatering. This technique is not well suited to small streams, but can be effective on large rivers or lakes, and where staging and heavy equipment access areas are available.

- K-rails are an isolation method that does not allow full dewatering, but can be used in small to large watercourses, and in fast-water situations.

- A relatively inexpensive isolation method is filter fabric isolation. This method involves placement of gravel bags or continuous berms to 'key-in' the fabric, and subsequently staking the fabric in place. This method should be used in relatively calm water, and can be used in smaller streams. Note that this is not a dewatering method, but rather a sediment isolation method.

- Turbidity curtains should be used where sediment discharge to a stream is unavoidable. They can also be used for in-stream construction, when dewatering an area is not required.

- When used in watercourses or streams, cofferdams must be used in accordance with permit requirements.

- Manufactured diversion structures should be installed following manufacturer's specifications.

- Filter fabric and turbidity curtain isolation installation methods can be found in the specific technique descriptions that follow.

Filter Fabric Isolation Technique

Definition and Purpose

A filter fabric isolation structure is a temporary structure built into a waterway to enclose a construction area and reduce sediment pollution from construction work in or adjacent to water. This structure is composed of filter fabric, gravel bags, and steel t-posts.

Appropriate Applications

- Filter fabric may be used for construction activities such as streambank stabilization, or culvert, bridge, pier or abutment installation. It may also be used in combination with other methods, such as clean water bypasses and/or pumps.
- Filter fabric isolation is relatively inexpensive. This method involves placement of gravel bags or continuous berms to 'key-in' the fabric, and subsequently staking the fabric in place.
- If spawning gravel is used, all other components of the isolation can be removed from the stream, and the gravel may be spread out and left as salmonid spawning habitat if approved in the permit. Whether spawning gravel or other types of gravel are used, only clean washed gravel should be used as infill for the gravel bags or continuous berm.
- This method should be used in relatively calm water, and can be used in smaller streams. This is not a dewatering method, but rather a sediment isolation method.
- Water levels inside and outside the fabric curtain must be about the same, as differential heads will cause the curtain to collapse.

Limitations

- Do not use if the installation, maintenance and removal of the structures will disturb sensitive aquatic species of concern.
- Filter fabrics are not appropriate for projects where dewatering is necessary.
- Filter fabrics are not appropriate to completely dam stream flow.

Design and Installation

- For the filter fabric isolation method, a non-woven or heavy-duty fabric is recommended over standard silt fence. Using rolled geotextiles allows non-standard widths to be used.
- Anchor filter fabric with gravel bags filled with clean, washed gravel. Do not use sand. If a bag should split open, the gravel can be left in the stream, where it can provide aquatic habitat benefits. If a sandbag splits open in a watercourse, the sand could cause a decrease in water quality, and could bury sensitive aquatic habitat.
- Another anchor alternative is a continuous berm, made with the Continuous Berm Machine. This is a gravel-filled bag that can be made in very long segments. The length of the berms is usually limited to 18 ft for ease of handling (otherwise, it gets too heavy to move).

- Place the fabric on the bottom of the stream, and place either a bag of clean, washed gravel or a continuous berm over the bottom of the silt fence fabric, such that a bag-width of fabric lies on the stream bottom. The bag should be placed on what will be the outside of the isolation area.
- Pull the fabric up, and place a metal t-post immediately behind the fabric, on the inside of the isolation area; attach the silt fence to the post with three diagonal nylon ties.
- Continue placing fabric as described above until the entire work area has been isolated, staking the fabric at least every 6 ft.

Inspection and Maintenance

- Immediately repair any gaps, holes or scour.
- Remove and properly dispose of sediment buildup.
- Remove BMP upon completion of construction activity. Recycle or reuse if applicable.
- Revegetate areas disturbed by BMP removal if needed.

Turbidity Curtain Isolation Technique

Definition and Purpose

A turbidity curtain is a fabric barrier used to isolate the near shore work area. The barriers are intended to confine the suspended sediment. The curtain is a floating barrier, and thus does not prevent water from entering the isolated area; rather, it prevents suspended sediment from getting out.

Appropriate Applications

Turbidity curtains should be used where sediment discharge to a stream is unavoidable. They are used when construction activities adjoin quiescent waters, such as lakes, ponds, and slow flowing rivers. The curtains are designed to deflect and contain sediment within a limited area and provide sufficient retention time so that the sediment particles will fall out of suspension.

Limitations

- Turbidity curtains should not be used in flowing water; they are best suited for use in ponds, lakes, and very slow-moving rivers.
- Turbidity curtains should not be placed across the width of a channel.
- Removing sediment that has been deflected and settled out by the curtain may create a discharge problem through the resuspension of particles and by accidental dumping by the removal equipment.

Design and Installation

- Turbidity curtains should be oriented parallel to the direction of flow.
- The curtain should extend the entire depth of the watercourse in calm-water situations.
- In wave conditions, the curtain should extend to within 1 ft of the bottom of the watercourse, such that the curtain does not stir up sediment by hitting the bottom repeatedly. If it is

desirable for the curtain to reach the bottom in an active-water situation, a pervious filter fabric may be used for the bottom 1 ft.

- The top of the curtain should consist of flexible flotation buoys, and the bottom should be held down by a load line incorporated into the curtain fabric. The fabric should be a brightly colored impervious mesh.
- The curtain should be held in place by anchors placed at least every 100 ft.
- First, place the anchors, then tow the fabric out in a furled condition, and connect to the anchors. The anchors should be connected to the flotation devices, and not to the bottom of the curtain. Once in place, cut the furling lines, and allow the bottom of the curtain to sink.
- Consideration must be given to the probable outcome of the removal procedure. It must be determined if it will create more of a sediment problem through re-suspension of the particles or by accidental dumping of material during removal. It is recommended that the soil particles trapped by the turbidity curtain only be removed if there has been a significant change in the original contours of the affected area in the watercourse.
- Particles should always be allowed to settle for a minimum of 6 to 12 hours prior to their removal or prior to removal of the turbidity curtain.

Maintenance and Inspection:

- The curtain should be inspected for holes or other problems, and any repairs needed should be made promptly.
- Allow sediment to settle for 6 to 12 hours prior to removal of sediment or curtain. This means that after removing sediment, wait an additional 6 to 12 hours before removing the curtain.
- To remove, install furling lines along the curtain, detach from anchors, and tow out of the water.

K-rail River Isolation

Definition and Purpose

This temporary sediment control or stream isolation method uses K-rails to form the sediment deposition area, or to isolate the in-stream or near-bank construction area.

Barriers are placed end-to-end in a pre-designed configuration and gravel-filled bags are used at the toe of the barrier and at their abutting ends to seal and prevent movement of sediment beneath or through the barrier walls.

Appropriate Applications

The K-rail isolation can be used in streams with higher water velocities than many other isolation techniques.

- This technique is also useful at the toe of embankments, and cut or fill slopes.

Limitations

- The K-rail method should not be used to dewater a project site, as the barrier is not watertight.

Design and Installation

- To create a floor for the K-rail, move large rocks and obstructions. Place washed gravel and gravel-filled bags to create a level surface for K-rails to sit. Washed gravel should always be used.
- Place the bottom two K-rails adjacent to each other, and parallel to the direction of flow; fill the center portion with gravel bags. Then place the third K-rail on top of the bottom two. There should be sufficient gravel bags between the bottom K-rails such that the top rail is supported by the gravel. Place plastic sheeting around the K-rails, and secure at the bottom with gravel bags.
- Further support can be added by pinning and cabling the K-rails together. Also, large riprap and boulders can be used to support either side of the K-rail, especially where there is strong current.

Inspection and Maintenance:

- The barrier should be inspected and any leaks, holes, or other problems should be addressed immediately.
- Sediment should be allowed to settle for at least 6 to 12 hours prior to removal of sediment, and for 6 to 12 hours prior to removal of the barrier.

Stream Diversions

The selection of which stream diversion technique to use will depend upon the type of work involved, physical characteristics of the site, and the volume of water flowing through the project.

Advantages of a Pumped Diversion

- Downstream sediment transport can be nearly eliminated.
- Dewatering of the work area is possible.
- Pipes can be moved around to allow construction operations.
- The dams can serve as temporary access to the site.
- Increased flows can be managed by adding more pumping capacity.

Disadvantages of a Pumped Diversion

- Flow volume is limited by pump capacity.
- A pumped diversion requires 24 hour monitoring of pumps.
- Sudden rain could overtop dams.
- Erosion at the outlet.

- Minor in-stream disturbance is required to install and remove dams.

Advantages of Excavated Channels and Flumes

- Excavated channels isolate work from water flow and allow dewatering.
- Excavated channels can handle larger flows than pumps.

Disadvantages of Excavated Channels and Flumes

- Bypass channel or flume must be sized to handle flows, including possible floods.
- Channels must be protected from erosion.
- Flow diversion and re-direction with small dams involves in-stream disturbance and mobilization of sediment.

Design and Installation

- Installation guidelines will vary based on existing site conditions and type of diversion used.
- Pump capacity must be sufficient for design flow.
- A standby pump is required in case a primary pump fails.
- Dam materials used to create dams upstream and downstream of diversion should be erosion resistant; materials such as steel plate, sheet pile, sandbags, continuous berms, inflatable water bladders, etc., would be acceptable.

When constructing a diversion channel, begin excavation of the channel at the proposed downstream end, and work upstream. Once the watercourse to be diverted is reached and the excavated channel is stable, breach the upstream end and allow water to flow down the new channel. Once flow has been established in the diversion channel, install the diversion weir in the main channel; this will force all water to be diverted from the main channel.

Inspection and Maintenance

- Pumped diversions require 24 hour monitoring of pumps.
- Inspect embankments and diversion channels for damage to the linings, accumulating debris, sediment buildup, and adequacy of the slope protection. Remove debris and repair linings and slope protection as required. Remove holes, gaps, or scour.
- Upon completion of work, the diversion or isolation structure should be removed and flow should be redirected through the new culvert or back into the original stream channel. Recycle or reuse if applicable.
- Revegetate areas disturbed by BMP removal if needed.

Costs

Costs of clear water diversion vary considerably and can be very high.

Inspection and Maintenance

- Inspect and verify that activity-based BMPs are in place prior to the commencement of associated activities. While activities associated with the BMP are under way, inspect weekly during the rainy season and at two-week intervals in the non-rainy season to verify continued BMP implementation.
- Inspect BMPs subject to non-stormwater discharges daily while non-stormwater discharges occur.
- Refer to BMP-specific inspection and maintenance requirements.

References

California Bank and Shore Rock Slope Protection Design – Practitioners Guide and Field Evaluations of Riprap Methods, Caltrans Study No. F90TL03, October, 2000.

Stormwater Quality Handbooks - Construction Site Best Management Practices (BMPs) Manual, State of California Department of Transportation (Caltrans), November 2000.

Illicit Connection/Discharge NS-6

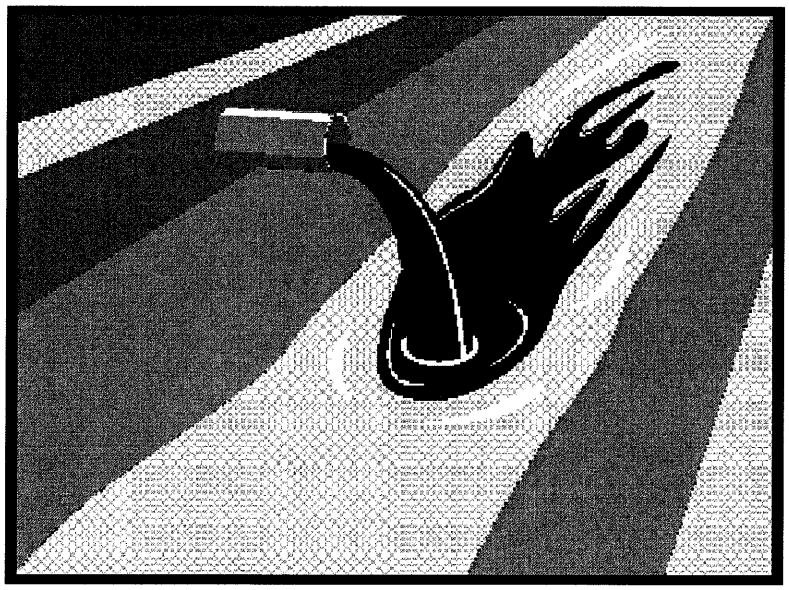

Objectives

EC	Erosion Control	
SE	Sediment Control	
TR	Tracking Control	
WE	Wind Erosion Control	
NS	Non-Stormwater Management Control	☑
WM	Waste Management and Materials Pollution Control	

Legend:

☑ **Primary Objective**

☒ **Secondary Objective**

Targeted Constituents

Sediment	
Nutrients	☑
Trash	☑
Metals	☑
Bacteria	☑
Oil and Grease	☑
Organics	☑

Potential Alternatives

None

Description and Purpose

Procedures and practices designed for construction contractors to recognize illicit connections or illegally dumped or discharged materials on a construction site and report incidents.

Suitable Applications

This best management practice (BMP) applies to all construction projects. Illicit connection/discharge and reporting is applicable anytime an illicit connection or discharge is discovered or illegally dumped material is found on the construction site.

Limitations

Illicit connections and illegal discharges or dumping, for the purposes of this BMP, refer to discharges and dumping caused by parties other than the contractor. If pre-existing hazardous materials or wastes are known to exist onsite, they should be identified in the SWPPP and handled as set forth in the SWPPP.

Implementation

Planning

- Review the SWPPP. Pre-existing areas of contamination should be identified and documented in the SWPPP.
- Inspect site before beginning the job for evidence of illicit connections, illegal dumping or discharges. Document any pre-existing conditions and notify the owner.

CASQA
CALIFORNIA STORMWATER QUALITY ASSOCIATION

- Inspect site regularly during project execution for evidence of illicit connections, illegal dumping or discharges.
- Observe site perimeter for evidence for potential of illicitly discharged or illegally dumped material, which may enter the job site.

Identification of Illicit Connections and Illegal Dumping or Discharges

- **General** – unlabeled and unidentifiable material should be treated as hazardous.
- **Solids** - Look for debris, or rubbish piles. Solid waste dumping often occurs on roadways with light traffic loads or in areas not easily visible from the traveled way.
- **Liquids** - signs of illegal liquid dumping or discharge can include:
  - Visible signs of staining or unusual colors to the pavement or surrounding adjacent soils
  - Pungent odors coming from the drainage systems
  - Discoloration or oily substances in the water or stains and residues detained within ditches, channels or drain boxes
  - Abnormal water flow during the dry weather season
- **Urban Areas** - Evidence of illicit connections or illegal discharges is typically detected at storm drain outfall locations or at manholes. Signs of an illicit connection or illegal discharge can include:
  - Abnormal water flow during the dry weather season
  - Unusual flows in sub drain systems used for dewatering
  - Pungent odors coming from the drainage systems
  - Discoloration or oily substances in the water or stains and residues detained within ditches, channels or drain boxes
  - Excessive sediment deposits, particularly adjacent to or near active offsite construction projects
- **Rural Areas** - Illicit connections or illegal discharges involving irrigation drainage ditches are detected by visual inspections. Signs of an illicit discharge can include:
  - Abnormal water flow during the non-irrigation season
  - Non-standard junction structures
  - Broken concrete or other disturbances at or near junction structures

Reporting

Notify the owner of any illicit connections and illegal dumping or discharge incidents at the time of discovery. For illicit connections or discharges to the storm drain system, notify the local stormwater management agency. For illegal dumping, notify the local law enforcement agency.

Cleanup and Removal

The responsibility for cleanup and removal of illicit or illegal dumping or discharges will vary by location. Contact the local stormwater management agency for further information.

Costs

Costs to look for and report illicit connections and illegal discharges and dumping are low. The best way to avoid costs associated with illicit connections and illegal discharges and dumping is to keep the project perimeters secure to prevent access to the site, to observe the site for vehicles that should not be there, and to document any waste or hazardous materials that exist onsite before taking possession of the site.

Inspection and Maintenance

- Inspect and verify that activity-based BMPs are in place prior to the commencement of associated activities. While activities associated with the BMP are under way, inspect weekly during the rainy season and at two-week intervals in the non-rainy season to verify continued BMP implementation.
- Inspect the site regularly to check for any illegal dumping or discharge.
- Prohibit employees and subcontractors from disposing of non-job related debris or materials at the construction site.
- Notify the owner of any illicit connections and illegal dumping or discharge incidents at the time of discovery.

References

Blueprint for a Clean Bay: Best Management Practices to Prevent Stormwater Pollution from Construction Related Activities; Santa Clara Valley Nonpoint Source Pollution Control Program, 1995.

Stormwater Quality Handbooks - Construction Site Best Management Practices (BMPs) Manual, State of California Department of Transportation (Caltrans), November 2000.

Stormwater Management for Construction Activities, Developing Pollution Prevention Plans and Best Management Practices, EPA 832-R-92005; USEPA, April 1992.

Vehicle and Equipment Cleaning NS-8

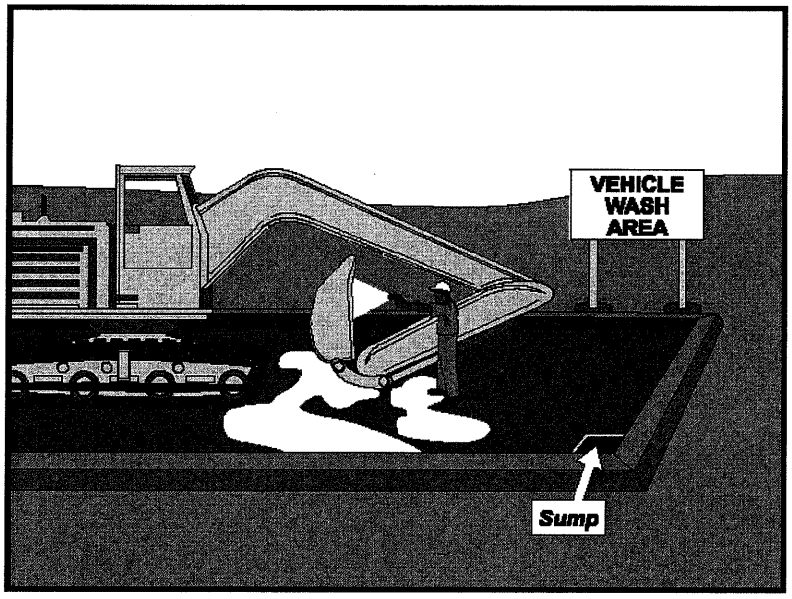

Objectives

EC	Erosion Control	
SE	Sediment Control	
TR	Tracking Control	
WE	Wind Erosion Control	
NS	Non-Stormwater Management Control	☑
WM	Waste Management and Materials Pollution Control	

Legend:

☑ **Primary Objective**

☒ **Secondary Objective**

Targeted Constituents

Sediment	☑
Nutrients	☑
Trash	
Metals	
Bacteria	
Oil and Grease	☑
Organics	☑

Potential Alternatives

None

Description and Purpose

Vehicle and equipment cleaning procedures and practices eliminate or reduce the discharge of pollutants to stormwater from vehicle and equipment cleaning operations. Procedures and practices include but are not limited to: using offsite facilities; washing in designated, contained areas only; eliminating discharges to the storm drain by infiltrating the wash water; and training employees and subcontractors in proper cleaning procedures.

Suitable Applications

These procedures are suitable on all construction sites where vehicle and equipment cleaning is performed.

Limitations

Even phosphate-free, biodegradable soaps have been shown to be toxic to fish before the soap degrades. Sending vehicles/equipment offsite should be done in conjunction with TR-1, Stabilized Construction Entrance/Exit.

Implementation

Other options to washing equipment onsite include contracting with either an offsite or mobile commercial washing business. These businesses may be better equipped to handle and dispose of the wash waters properly. Performing this work offsite can also be economical by eliminating the need for a separate washing operation onsite.

If washing operations are to take place onsite, then:

CASQA
CALIFORNIA STORMWATER QUALITY ASSOCIATION

- Use phosphate-free, biodegradable soaps.
- Educate employees and subcontractors on pollution prevention measures.
- Do not permit steam cleaning onsite. Steam cleaning can generate significant pollutant concentrates.
- Cleaning of vehicles and equipment with soap, solvents or steam should not occur on the project site unless resulting wastes are fully contained and disposed of. Resulting wastes should not be discharged or buried, and must be captured and recycled or disposed according to the requirements of WM-10, Liquid Waste Management or WM-6, Hazardous Waste Management, depending on the waste characteristics. Minimize use of solvents. Use of diesel for vehicle and equipment cleaning is prohibited.
- All vehicles and equipment that regularly enter and leave the construction site must be cleaned offsite.
- When vehicle and equipment washing and cleaning must occur onsite, and the operation cannot be located within a structure or building equipped with appropriate disposal facilities, the outside cleaning area should have the following characteristics:
  - Located away from storm drain inlets, drainage facilities, or watercourses
  - Paved with concrete or asphalt and bermed to contain wash waters and to prevent runon and runoff
  - Configured with a sump to allow collection and disposal of wash water
  - No discharge of wash waters to storm drains or watercourses
  - Used only when necessary
- When cleaning vehicles and equipment with water:
  - Use as little water as possible. High-pressure sprayers may use less water than a hose and should be considered
  - Use positive shutoff valve to minimize water usage
  - Facility wash racks should discharge to a sanitary sewer, recycle system or other approved discharge system and must not discharge to the storm drainage system, watercourses, or to groundwater

Costs

Cleaning vehicles and equipment at an offsite facility may reduce overall costs for vehicle and equipment cleaning by eliminating the need to provide similar services onsite. When onsite cleaning is needed, the cost to establish appropriate facilities is relatively low on larger, long-duration projects, and moderate to high on small, short-duration projects.

Inspection and Maintenance

- Inspect and verify that activity-based BMPs are in place prior to the commencement of associated activities. While activities associated with the BMP are under way, inspect weekly during the rainy season and at two-week intervals in the non-rainy season to verify continued BMP implementation.
- Inspect BMPs subject to non-stormwater discharges daily while non-stormwater discharges occur.
- Inspection and maintenance is minimal, although some berm repair may be necessary.
- Monitor employees and subcontractors throughout the duration of the construction project to ensure appropriate practices are being implemented.
- Inspect sump regularly and remove liquids and sediment as needed.
- Prohibit employees and subcontractors from washing personal vehicles and equipment on the construction site.

References

Stormwater Quality Handbooks - Construction Site Best Management Practices (BMPs) Manual, State of California Department of Transportation (Caltrans), November 2000.

Swisher, R.D. Surfactant Biodegradation, Marcel Decker Corporation, 1987.

Vehicle and Equipment Fueling NS-9

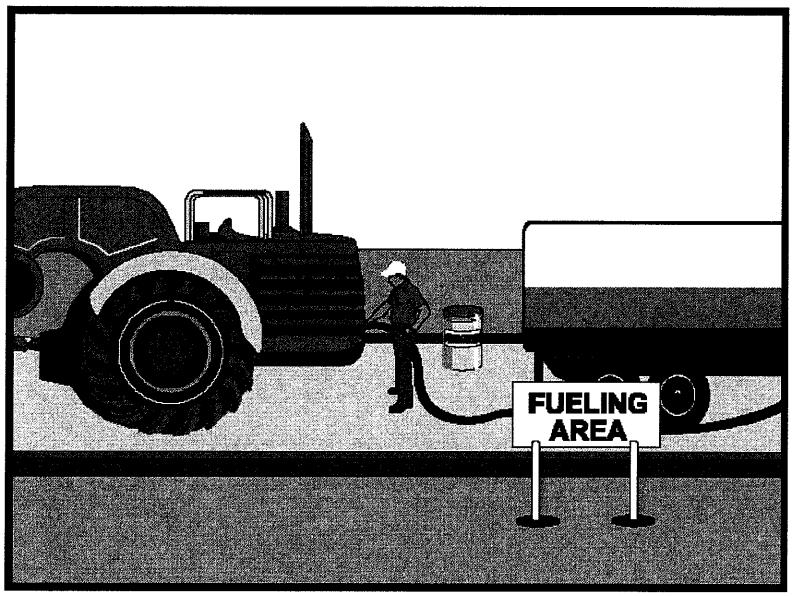

Objectives

EC	Erosion Control	
SE	Sediment Control	
TR	Tracking Control	
WE	Wind Erosion Control	
NS	Non-Stormwater Management Control	☑
WM	Waste Management and Materials Pollution Control	

Legend:

☑ **Primary Objective**

☒ **Secondary Objective**

Targeted Constituents

Sediment	
Nutrients	
Trash	
Metals	
Bacteria	
Oil and Grease	☑
Organics	

Potential Alternatives

None

Description and Purpose

Vehicle equipment fueling procedures and practices are designed to prevent fuel spills and leaks, and reduce or eliminate contamination of stormwater. This can be accomplished by using offsite facilities, fueling in designated areas only, enclosing or covering stored fuel, implementing spill controls, and training employees and subcontractors in proper fueling procedures.

Suitable Applications

These procedures are suitable on all construction sites where vehicle and equipment fueling takes place.

Limitations

Onsite vehicle and equipment fueling should only be used where it is impractical to send vehicles and equipment offsite for fueling. Sending vehicles and equipment offsite should be done in conjunction with TR-1, Stabilized Construction Entrance/ Exit.

Implementation

- Use offsite fueling stations as much as possible. These businesses are better equipped to handle fuel and spills properly. Performing this work offsite can also be economical by eliminating the need for a separate fueling area at a site.
- Discourage "topping-off" of fuel tanks.

CASQA
CALIFORNIA STORMWATER QUALITY ASSOCIATION

- Absorbent spill cleanup materials and spill kits should be available in fueling areas and on fueling trucks, and should be disposed of properly after use.
- Drip pans or absorbent pads should be used during vehicle and equipment fueling, unless the fueling is performed over an impermeable surface in a dedicated fueling area.
- Use absorbent materials on small spills. Do not hose down or bury the spill. Remove the adsorbent materials promptly and dispose of properly.
- Avoid mobile fueling of mobile construction equipment around the site; rather, transport the equipment to designated fueling areas. With the exception of tracked equipment such as bulldozers and large excavators, most vehicles should be able to travel to a designated area with little lost time.
- Train employees and subcontractors in proper fueling and cleanup procedures.
- When fueling must take place onsite, designate an area away from drainage courses to be used. Fueling areas should be identified in the SWPPP.
- Dedicated fueling areas should be protected from stormwater runon and runoff, and should be located at least 50 ft away from downstream drainage facilities and watercourses. Fueling must be performed on level-grade areas.
- Protect fueling areas with berms and dikes to prevent runon, runoff, and to contain spills.
- Nozzles used in vehicle and equipment fueling should be equipped with an automatic shutoff to control drips. Fueling operations should not be left unattended.
- Use vapor recovery nozzles to help control drips as well as air pollution where required by Air Quality Management Districts (AQMD).
- Federal, state, and local requirements should be observed for any stationary above ground storage tanks.

Costs

- All of the above measures are low cost except for the capital costs of above ground tanks that meet all local environmental, zoning, and fire codes.

Inspection and Maintenance

- Vehicles and equipment should be inspected each day of use for leaks. Leaks should be repaired immediately or problem vehicles or equipment should be removed from the project site.
- Keep ample supplies of spill cleanup materials onsite.
- Immediately clean up spills and properly dispose of contaminated soil and cleanup materials.

References

Blueprint for a Clean Bay: Best Management Practices to Prevent Stormwater Pollution from Construction Related Activities; Santa Clara Valley Nonpoint Source Pollution Control Program, 1995.

Coastal Nonpoint Pollution Control Program: Program Development and Approval Guidance, Working Group Working Paper; USEPA, April 1992.

Stormwater Quality Handbooks - Construction Site Best Management Practices (BMPs) Manual, State of California Department of Transportation (Caltrans), November 2000.

Stormwater Management for Construction Activities, Developing Pollution Prevention Plans and Best Management Practices, EPA 832-R-92005; USEPA, April 1992.

Vehicle & Equipment Maintenance NS-10

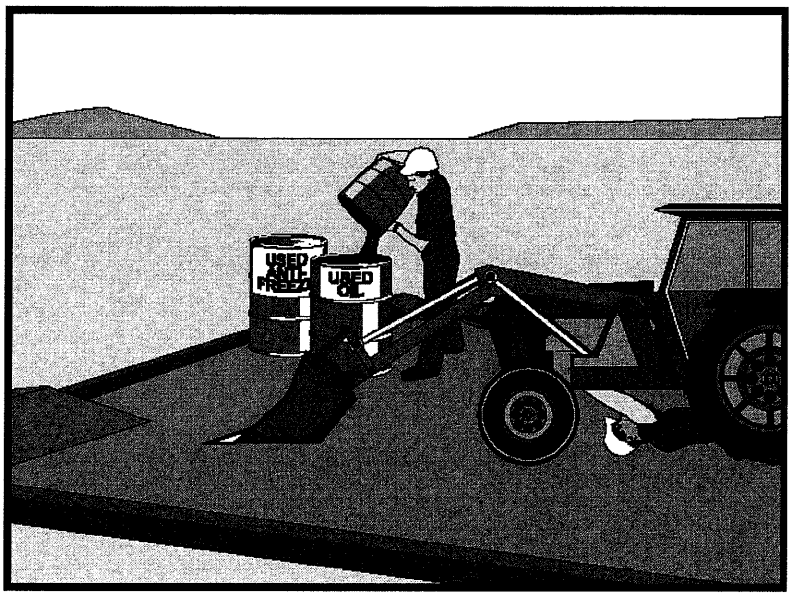

Objectives

EC	Erosion Control	
SE	Sediment Control	
TR	Tracking Control	
WE	Wind Erosion Control	
NS	Non-Stormwater Management Control	☑
WM	Waste Management and Materials Pollution Control	

Legend:

☑ **Primary Objective**

☒ **Secondary Objective**

Targeted Constituents

Sediment	
Nutrients	☑
Trash	☑
Metals	
Bacteria	
Oil and Grease	☑
Organics	☑

Potential Alternatives

None

Description and Purpose

Prevent or reduce the contamination of stormwater resulting from vehicle and equipment maintenance by running a "dry and clean site". The best option would be to perform maintenance activities at an offsite facility. If this option is not available then work should be performed in designated areas only, while providing cover for materials stored outside, checking for leaks and spills, and containing and cleaning up spills immediately. Employees and subcontractors must be trained in proper procedures.

Suitable Applications

These procedures are suitable on all construction projects where an onsite yard area is necessary for storage and maintenance of heavy equipment and vehicles.

Limitations

Onsite vehicle and equipment maintenance should only be used where it is impractical to send vehicles and equipment offsite for maintenance and repair. Sending vehicles/equipment offsite should be done in conjunction with TR-1, Stabilized Construction Entrance/Exit.

Outdoor vehicle or equipment maintenance is a potentially significant source of stormwater pollution. Activities that can contaminate stormwater include engine repair and service, changing or replacement of fluids, and outdoor equipment storage and parking (engine fluid leaks). For further information on vehicle or equipment servicing, see NS-8, Vehicle and Equipment Cleaning, and NS-9, Vehicle and Equipment Fueling.

CASQA
CALIFORNIA STORMWATER QUALITY ASSOCIATION

NS-10 Vehicle & Equipment Maintenance

Implementation

- Use offsite repair shops as much as possible. These businesses are better equipped to handle vehicle fluids and spills properly. Performing this work offsite can also be economical by eliminating the need for a separate maintenance area.
- If maintenance must occur onsite, use designated areas, located away from drainage courses. Dedicated maintenance areas should be protected from stormwater runon and runoff, and should be located at least 50 ft from downstream drainage facilities and watercourses.
- Drip pans or absorbent pads should be used during vehicle and equipment maintenance work that involves fluids, unless the maintenance work is performed over an impermeable surface in a dedicated maintenance area.
- Place a stockpile of spill cleanup materials where it will be readily accessible.
- All fueling trucks and fueling areas are required to have spill kits and/or use other spill protection devices.
- Use adsorbent materials on small spills. Remove the absorbent materials promptly and dispose of properly.
- Inspect onsite vehicles and equipment daily at startup for leaks, and repair immediately.
- Keep vehicles and equipment clean; do not allow excessive build-up of oil and grease.
- Segregate and recycle wastes, such as greases, used oil or oil filters, antifreeze, cleaning solutions, automotive batteries, hydraulic and transmission fluids. Provide secondary containment and covers for these materials if stored onsite.
- Train employees and subcontractors in proper maintenance and spill cleanup procedures.
- Drip pans or plastic sheeting should be placed under all vehicles and equipment placed on docks, barges, or other structures over water bodies when the vehicle or equipment is planned to be idle for more than 1 hour.
- For long-term projects, consider using portable tents or covers over maintenance areas if maintenance cannot be performed offsite.
- Consider use of new, alternative greases and lubricants, such as adhesive greases, for chassis lubrication and fifth-wheel lubrication.
- Properly dispose of used oils, fluids, lubricants, and spill cleanup materials.
- Do not place used oil in a dumpster or pour into a storm drain or watercourse.
- Properly dispose of or recycle used batteries.
- Do not bury used tires.
- Repair leaks of fluids and oil immediately.

Listed below is further information if you must perform vehicle or equipment maintenance onsite.

Safer Alternative Products

- Consider products that are less toxic or hazardous than regular products. These products are often sold under an "environmentally friendly" label.
- Consider use of grease substitutes for lubrication of truck fifth-wheels. Follow manufacturers label for details on specific uses.
- Consider use of plastic friction plates on truck fifth-wheels in lieu of grease. Follow manufacturers label for details on specific uses.

Waste Reduction

Parts are often cleaned using solvents such as trichloroethylene, trichloroethane, or methylene chloride. Many of these cleaners are listed in California Toxic Rule as priority pollutants. These materials are harmful and must not contaminate stormwater. They must be disposed of as a hazardous waste. Reducing the number of solvents makes recycling easier and reduces hazardous waste management costs. Often, one solvent can perform a job as well as two different solvents. Also, if possible, eliminate or reduce the amount of hazardous materials and waste by substituting non-hazardous or less hazardous materials. For example, replace chlorinated organic solvents with non-chlorinated solvents. Non-chlorinated solvents like kerosene or mineral spirits are less toxic and less expensive to dispose of properly. Check the list of active ingredients to see whether it contains chlorinated solvents. The "chlor" term indicates that the solvent is chlorinated. Also, try substituting a wire brush for solvents to clean parts.

Recycling and Disposal

Separating wastes allows for easier recycling and may reduce disposal costs. Keep hazardous wastes separate, do not mix used oil solvents, and keep chlorinated solvents (like,-trichloroethane) separate from non-chlorinated solvents (like kerosene and mineral spirits). Promptly transfer used fluids to the proper waste or recycling drums. Don't leave full drip pans or other open containers lying around. Provide cover and secondary containment until these materials can be removed from the site.

Oil filters can be recycled. Ask your oil supplier or recycler about recycling oil filters.

Do not dispose of extra paints and coatings by dumping liquid onto the ground or throwing it into dumpsters. Allow coatings to dry or harden before disposal into covered dumpsters.

Store cracked batteries in a non-leaking secondary container. Do this with all cracked batteries, even if you think all the acid has drained out. If you drop a battery, treat it as if it is cracked. Put it into the containment area until you are sure it is not leaking.

Costs

All of the above are low cost measures. Higher costs are incurred to setup and maintain onsite maintenance areas.

NS-10 Vehicle & Equipment Maintenance

Inspection and Maintenance

- Inspect and verify that activity-based BMPs are in place prior to the commencement of associated activities. While activities associated with the BMP are under way, inspect weekly during the rainy season and at two-week intervals in the non-rainy season to verify continued BMP implementation.
- Inspect BMPs subject to non-stormwater discharges daily while non-stormwater discharges occur.
- Keep ample supplies of spill cleanup materials onsite.
- Maintain waste fluid containers in leak proof condition.
- Vehicles and equipment should be inspected on each day of use. Leaks should be repaired immediately or the problem vehicle(s) or equipment should be removed from the project site.
- Inspect equipment for damaged hoses and leaky gaskets routinely. Repair or replace as needed.

References

Blueprint for a Clean Bay: Best Management Practices to Prevent Stormwater Pollution from Construction Related Activities; Santa Clara Valley Nonpoint Source Pollution Control Program, 1995.

Coastal Nonpoint Pollution Control Program; Program Development and Approval Guidance, Working Group, Working Paper; USEPA, April 1992.

Stormwater Quality Handbooks - Construction Site Best Management Practices (BMPs) Manual, State of California Department of Transportation (Caltrans), November 2000.

Concrete Curing NS-12

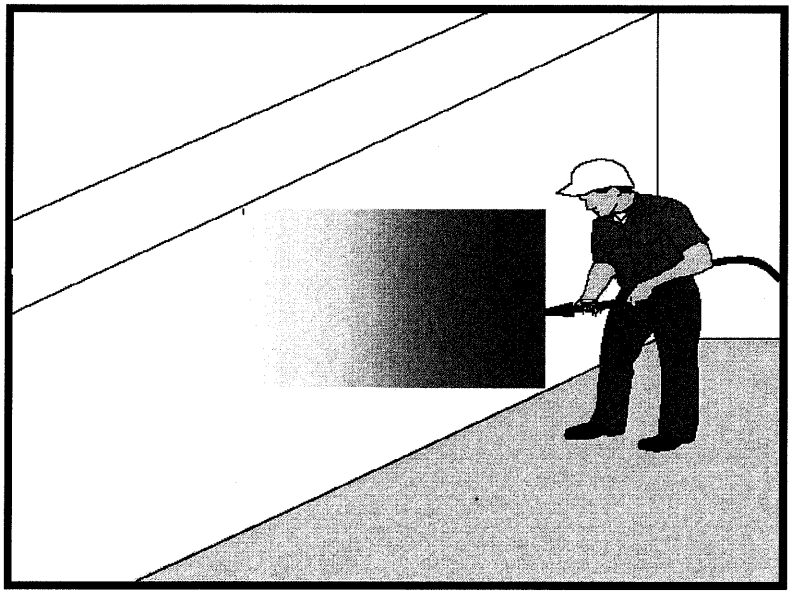

Objectives

EC	Erosion Control	
SE	Sediment Control	
TR	Tracking Control	
WE	Wind Erosion Control	
NS	Non-Stormwater Management Control	☑
WM	Waste Management and Materials Pollution Control	☑

Legend:

☑ **Primary Objective**

☒ **Secondary Objective**

Targeted Constituents

Sediment	☑
Nutrients	
Trash	
Metals	☑
Bacteria	
Oil and Grease	☑
Organics	

Potential Alternatives

None

Description and Purpose

Concrete curing is used in the construction of structures such as bridges, retaining walls, pump houses, large slabs, and structured foundations. Concrete curing includes the use of both chemical and water methods. Discharges of stormwater and non-stormwater exposed to concrete during curing may have a high pH and may contain chemicals, metals, and fines. Proper procedures reduce or eliminate the contamination of stormwater runoff during concrete curing.

Suitable Applications

Suitable applications include all projects where Portland Cement Concrete (PCC) and concrete curing chemicals are placed where they can be exposed to rainfall, runoff from other areas, or where runoff from the PCC will leave the site.

Limitations

None identified.

Implementation

Chemical Curing

- Avoid over spray of curing compounds.
- Minimize the drift of chemical cure as much as possible by applying the curing compound close to the concrete surface. Apply an amount of compound that covers the surface, but does not allow any runoff of the compound.

- Use proper storage and handling techniques for concrete curing compounds. Refer to WM-1, Material Delivery and Storage.
- Protect drain inlets prior to the application of curing compounds.
- Refer to WM-4, Spill Prevention and Control.

Water Curing for Bridge Decks, Retaining Walls, and other Structures

- Direct cure water away from inlets and watercourses to collection areas for infiltration or other means of removal in accordance with all applicable permits.
- Collect cure water at the top of slopes and transport or dispose of water in a non-erodible manner. See EC-9 Earth Dikes and Drainage Swales, EC-10, Velocity Dissipation Devices, and EC-11, Slope Drains.
- Utilize wet blankets or a similar method that maintains moisture while minimizing the use and possible discharge of water.

Costs

All of the above measures are generally low cost.

Inspection and Maintenance

- Inspect and verify that activity-based BMPs are in place prior to the commencement of associated activities. While activities associated with the BMP are under way, inspect weekly during the rainy season and at two-week intervals in the non-rainy season to verify continued BMP implementation.
- Inspect BMPs subject to non-stormwater discharges daily while non-stormwater discharges occur.
- Ensure that employees and subcontractors implement appropriate measures for storage, handling, and use of curing compounds.
- Inspect cure containers and spraying equipment for leaks.

References

Blue Print for a Clean Bay-Construction-Related Industries: Best Management Practices for Stormwater Pollution Prevention; Santa Clara Valley Non Point Source Pollution Control Program, 1992.

Stormwater Quality Handbooks - Construction Site Best Management Practices (BMPs) Manual, State of California Department of Transportation (Caltrans), November 2000.

Stormwater Management for Construction Activities, Developing Pollution Prevention Plans and Best Management Practices, EPA 832-R-92005; USEPA, April 1992.

Concrete Finishing NS-13

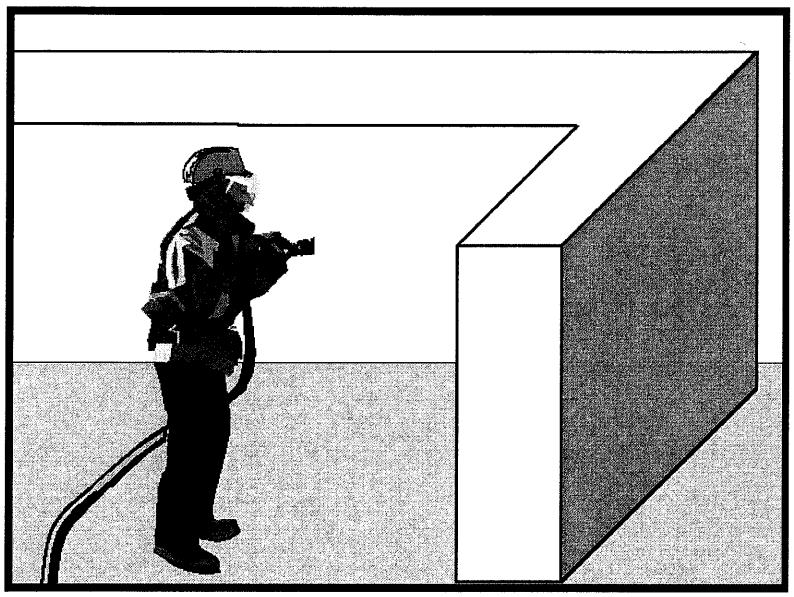

Objectives

EC	Erosion Control	
SE	Sediment Control	
TR	Tracking Control	
WE	Wind Erosion Control	
NS	Non-Stormwater Management Control	☑
WM	Waste Management and Materials Pollution Control	☑

Legend:

☑ **Primary Objective**

☒ **Secondary Objective**

Targeted Constituents

Sediment	☑
Nutrients	
Trash	
Metals	☑
Bacteria	
Oil and Grease	
Organics	☑

Potential Alternatives

None

Description and Purpose

Concrete finishing methods are used for bridge deck rehabilitation, paint removal, curing compound removal, and final surface finish appearances. Methods include sand blasting, shot blasting, grinding, or high pressure water blasting. Stormwater and non-stormwater exposed to concrete finishing by-products may have a high pH and may contain chemicals, metals, and fines. Proper procedures and implementation of appropriate BMPs can minimize the impact that concrete-finishing methods may have on stormwater and non-stormwater discharges.

Suitable Applications

These procedures apply to all construction locations where concrete finishing operations are performed.

Limitations

None identified.

Implementation

- Collect and properly dispose of water from high-pressure water blasting operations.
- Collect contaminated water from blasting operations at the top of slopes. Transport or dispose of contaminated water while using BMPs such as those for erosion control. Refer to EC-9, Earth Dikes and Drainage Swales, EC-10, Velocity Dissipation Devices, and EC-11, Slope Drains.

CASQA
CALIFORNIA STORMWATER QUALITY ASSOCIATION

- Direct water from blasting operations away from inlets and watercourses to collection areas for infiltration or other means of removal (dewatering). Refer to NS-2 De-Watering Operations.
- Protect inlets during sandblasting operations. Refer to SE-10, Storm Drain Inlet Protection.
- Refer to WM-8, Concrete Waste Management for disposal of concrete based debris.
- Minimize the drift of dust and blast material as much as possible by keeping the blasting nozzle close to the surface.
- When blast residue contains a potentially hazardous waste, refer to WM-6, Hazardous Waste Management.

Costs

These measures are generally of low cost.

Inspection and Maintenance

- Inspect and verify that activity-based BMPs are in place prior to the commencement of associated activities. While activities associated with the BMP are under way, inspect weekly during the rainy season and at two-week intervals in the non-rainy season to verify continued BMP implementation.
- Inspect BMPs subject to non-stormwater discharges daily while non-stormwater discharges occur.
- Sweep or vacuum up debris from sandblasting at the end of each shift.
- At the end of each work shift, remove and contain liquid and solid waste from containment structures, if any, and from the general work area.

References

Blueprint for a Clean Bay: Best Management Practices to Prevent Stormwater Pollution from Construction Related Activities; Santa Clara Valley Nonpoint Source Pollution Control Program, 1995.

Stormwater Quality Handbooks - Construction Site Best Management Practices (BMPs) Manual, State of California Department of Transportation (Caltrans), November 2000.

Stormwater Management for Construction Activities, Developing Pollution Prevention Plans and Best Management Practices, EPA 832-R-92005; USEPA, April 1992.

Silt Fence

SE-1

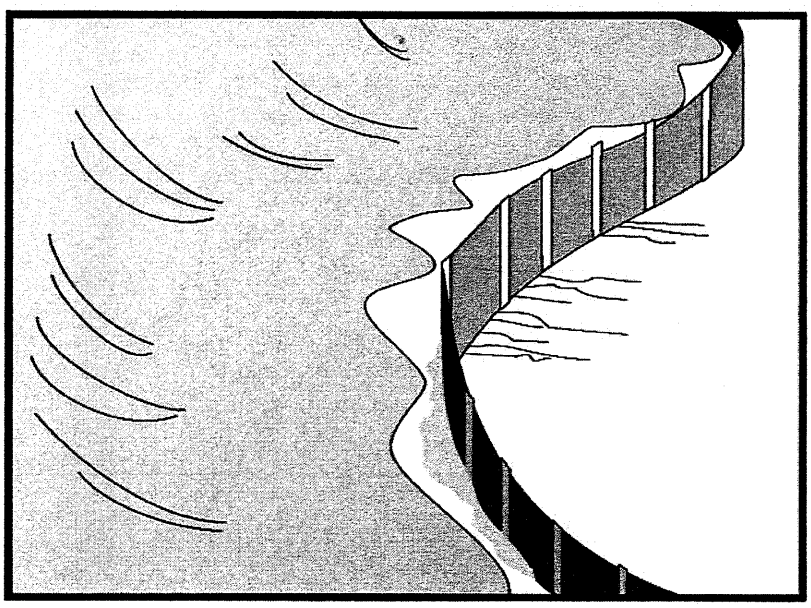

Objectives

EC	Erosion Control	
SE	Sediment Control	☑
TR	Tracking Control	
WE	Wind Erosion Control	
NS	Non-Stormwater Management Control	
WM	Waste Management and Materials Pollution Control	

Legend:

☑ **Primary Objective**

☒ **Secondary Objective**

Targeted Constituents

Sediment	☑
Nutrients	
Trash	
Metals	
Bacteria	
Oil and Grease	
Organics	

Potential Alternatives

SE-5 Fiber Rolls

SE-6 Gravel Bag Berm

SE-8 Sandbag Barrier

SE-9 Straw Bale Barrier

Description and Purpose

A silt fence is made of a filter fabric that has been entrenched, attached to supporting poles, and sometimes backed by a plastic or wire mesh for support. The silt fence detains sediment-laden water, promoting sedimentation behind the fence.

Suitable Applications

Silt fences are suitable for perimeter control, placed below areas where sheet flows discharge from the site. They should also be used as interior controls below disturbed areas where runoff may occur in the form of sheet and rill erosion. Silt fences are generally ineffective in locations where the flow is concentrated and are only applicable for sheet or overland flows. Silt fences are most effective when used in combination with erosion controls. Suitable applications include:

- Along the perimeter of a project.
- Below the toe or down slope of exposed and erodible slopes.
- Along streams and channels.
- Around temporary spoil areas and stockpiles.
- Below other small cleared areas.

Limitations

- Do not use in streams, channels, drain inlets, or anywhere flow is concentrated.

CASQA

CALIFORNIA STORMWATER QUALITY ASSOCIATION

- Do not use in locations where ponded water may cause flooding.
- Do not place fence on a slope, or across any contour line. If not installed at the same elevation throughout, silt fences will create erosion.
- Filter fences will create a temporary sedimentation pond on the upstream side of the fence and may cause temporary flooding. Fences not constructed on a level contour will be overtopped by concentrated flow resulting in failure of the filter fence.
- Improperly installed fences are subject to failure from undercutting, overlapping, or collapsing.
  - Not effective unless trenched and keyed in.
  - Not intended for use as mid-slope protection on slopes greater than 4:1 (H:V).
  - Do not allow water depth to exceed 1.5 ft at any point.

Implementation

General

A silt fence is a temporary sediment barrier consisting of filter fabric stretched across and attached to supporting posts, entrenched, and, depending upon the strength of fabric used, supported with plastic or wire mesh fence. Silt fences trap sediment by intercepting and detaining small amounts of sediment-laden runoff from disturbed areas in order to promote sedimentation behind the fence.

Silt fences are preferable to straw bale barriers in many cases. Laboratory work at the Virginia Highway and Transportation Research Council has shown that silt fences can trap a much higher percentage of suspended sediments than can straw bales. While the failure rate of silt fences is lower than that of straw bale barriers, there are many instances where silt fences have been improperly installed. The following layout and installation guidance can improve performance and should be followed:

- Use principally in areas where sheet flow occurs.
- Don't use in streams, channels, or anywhere flow is concentrated. Don't use silt fences to divert flow.
- Don't use below slopes subject to creep, slumping, or landslides.
- Select filter fabric that retains 85% of soil by weight, based on sieve analysis, but that is not finer than an equivalent opening size of 70.
- Install along a level contour, so water does not pond more than 1.5 ft at any point along the silt fence.
- The maximum length of slope draining to any point along the silt fence should be 200 ft or less.
- The maximum slope perpendicular to the fence line should be 1:1.

- Provide sufficient room for runoff to pond behind the fence and to allow sediment removal equipment to pass between the silt fence and toes of slopes or other obstructions. About 1200 ft^2 of ponding area should be provided for every acre draining to the fence.
- Turn the ends of the filter fence uphill to prevent stormwater from flowing around the fence.
- Leave an undisturbed or stabilized area immediately down slope from the fence where feasible.
- Silt fences should remain in place until the disturbed area is permanently stabilized.

Design and Layout

Selection of a filter fabric is based on soil conditions at the construction site (which affect the equivalent opening size (EOS) fabric specification) and characteristics of the support fence (which affect the choice of tensile strength). The designer should specify a filter fabric that retains the soil found on the construction site yet that it has openings large enough to permit drainage and prevent clogging. The following criteria is recommended for selection of the equivalent opening size:

1. If 50 percent or less of the soil, by weight, will pass the U.S. Standard Sieve No. 200, select the EOS to retain 85 % of the soil. The EOS should not be finer than EOS 70.
2. For all other soil types, the EOS should be no larger than the openings in the U.S. Standard Sieve No. 70 except where direct discharge to a stream, lake, or wetland will occur, then the EOS should be no larger than Standard Sieve No. 100.

To reduce the chance of clogging, it is preferable to specify a fabric with openings as large as allowed by the criteria. No fabric should be specified with an EOS smaller than U.S. Standard Sieve No. 100. If 85% or more of a soil, by weight, passes through the openings in a No. 200 sieve, filter fabric should not be used. Most of the particles in such a soil would not be retained if the EOS was too large and they would clog the fabric quickly if the EOS were small enough to capture the soil.

The fence should be supported by a plastic or wire mesh if the fabric selected does not have sufficient strength and bursting strength characteristics for the planned application (as recommended by the fabric manufacturer). Filter fabric material should contain ultraviolet inhibitors and stabilizers to provide a minimum of six months of expected usable construction life at a temperature range of 0 °F to 120 °F.

- Layout in accordance with attached figures.
- For slopes steeper than 2:1 (H:V) and that contain a high number of rocks or large dirt clods that tend to dislodge, it may be necessary to install additional protection immediately adjacent to the bottom of the slope, prior to installing silt fence. Additional protection may be a chain link fence or a cable fence.
- For slopes adjacent to sensitive receiving waters or Environmentally Sensitive Areas (ESAs), silt fence should be used in conjunction with erosion control BMPs.

Materials

- Silt fence fabric should be woven polypropylene with a minimum width of 36 in. and a minimum tensile strength of 100 lb force. The fabric should conform to the requirements in ASTM designation D4632 and should have an integral reinforcement layer. The reinforcement layer should be a polypropylene, or equivalent, net provided by the manufacturer. The permittivity of the fabric should be between 0.1 sec^{-1} and 0.15 sec^{-1} in conformance with the requirements in ASTM designation D4491.

- Wood stakes should be commercial quality lumber of the size and shape shown on the plans. Each stake should be free from decay, splits or cracks longer than the thickness of the stake or other defects that would weaken the stakes and cause the stakes to be structurally unsuitable.

- Staples used to fasten the fence fabric to the stakes should be not less than 1.75 in. long and should be fabricated from 15 gauge or heavier wire. The wire used to fasten the tops of the stakes together when joining two sections of fence should be 9 gauge or heavier wire. Galvanizing of the fastening wire will not be required.

- There are new products that may use prefabricated plastic holders for the silt fence and use bar reinforcement instead of wood stakes. If bar reinforcement is used in lieu of wood stakes, use number four or greater bar. Provide end protection for any exposed bar reinforcement.

Installation Guidelines

Silt fences are to be constructed on a level contour. Sufficient area should exist behind the fence for ponding to occur without flooding or overtopping the fence.

- A trench should be excavated approximately 6 in. wide and 6 in. deep along the line the proposed silt fence.

- Bottom of the silt fence should be keyed-in a minimum of 12 in.

- Posts should be spaced a maximum of 6 ft apart and driven securely into the ground a minimum of 18 in. or 12 in. below the bottom of the trench.

- When standard strength filter fabric is used, a plastic or wire mesh support fence should be fastened securely to the upslope side of posts using heavy–duty wire staples at least 1 in. long. The mesh should extend into the trench. When extra-strength filter fabric and closer post spacing are used, the mesh support fence may be eliminated. Filter fabric should be purchased in a long roll, and then cut to the length of the barrier. When joints are necessary, filter cloth should be spliced together only at a support post, with a minimum 6 in. overlap and both ends securely fastened to the post.

- The trench should be backfilled with compacted native material.

- Construct silt fences with a setback of at least 3 ft from the toe of a slope. Where a silt fence is determined to be not practicable due to specific site conditions, the silt fence may be constructed at the toe of the slope, but should be constructed as far from the toe of the slope as practicable. Silt fences close to the toe of the slope will be less effective and difficult to maintain.

- Construct the length of each reach so that the change in base elevation along the reach does not exceed 1/3 the height of the barrier; in no case should the reach exceed 500 ft.

Costs

- Average annual cost for installation and maintenance (assumes 6 month useful life): $7 per lineal foot ($850 per drainage acre). Range of cost is $3.50 - $9.10 per lineal foot.

Inspection and Maintenance

- Inspect BMPs prior to forecast rain, daily during extended rain events, after rain events, weekly during the rainy season, and at two-week intervals during the non-rainy season.
- Repair undercut silt fences.
- Repair or replace split, torn, slumping, or weathered fabric. The lifespan of silt fence fabric is generally 5 to 8 months.
- Silt fences that are damaged and become unsuitable for the intended purpose should be removed from the site of work, disposed of, and replaced with new silt fence barriers.
- Sediment that accumulates in the BMP must be periodically removed in order to maintain BMP effectiveness. Sediment should be removed when the sediment accumulation reaches one-third of the barrier height. Sediment removed during maintenance may be incorporated into earthwork on the site or disposed at an appropriate location.
- Silt fences should be left in place until the upstream area is permanently stabilized. Until then, the silt fence must be inspected and maintained.
- Holes, depressions, or other ground disturbance caused by the removal of the silt fences should be backfilled and repaired.

References

Manual of Standards of Erosion and Sediment Control Measures, Association of Bay Area Governments, May 1995.

National Management Measures to Control Nonpoint Source Pollution from Urban Areas, United States Environmental Protection Agency, 2002.

Proposed Guidance Specifying Management Measures for Sources of Nonpoint Pollution in Coastal Waters, Work Group-Working Paper, USEPA, April 1992.

Sedimentation and Erosion Control Practices, and Inventory of Current Practices (Draft), UESPA, 1990.

Southeastern Wisconsin Regional Planning Commission (SWRPC). Costs of Urban Nonpoint Source Water Pollution Control Measures. Technical Report No. 31. Southeastern Wisconsin Regional Planning Commission, Waukesha, WI. 1991

Stormwater Quality Handbooks - Construction Site Best Management Practices (BMPs) Manual, State of California Department of Transportation (Caltrans), November 2000.

Stormwater Management Manual for The Puget Sound Basin, Washington State Department of Ecology, Public Review Draft, 1991.

U.S. Environmental Protection Agency (USEPA). Stormwater Management for Industrial Activities: Developing Pollution Prevention Plans and Best Management Practices. U.S. Environmental Protection Agency, Office of Water, Washington, DC, 1992.

Water Quality Management Plan for the Lake Tahoe Region, Volume II, Handbook of Management Practices, Tahoe Regional Planning Agency, November 1988.

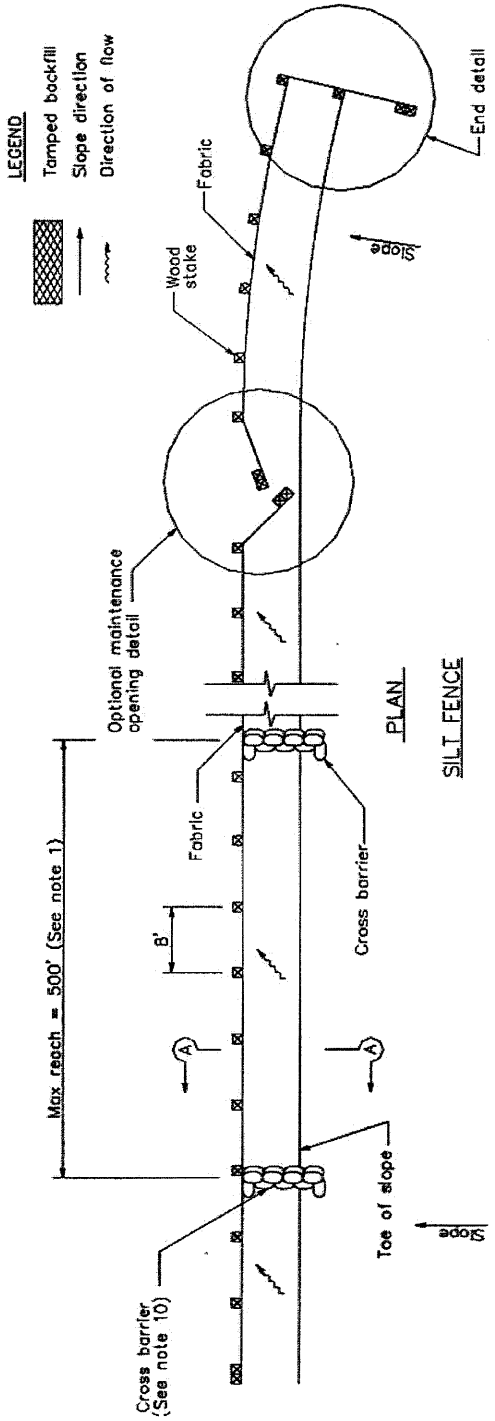

PLAN

SILT FENCE

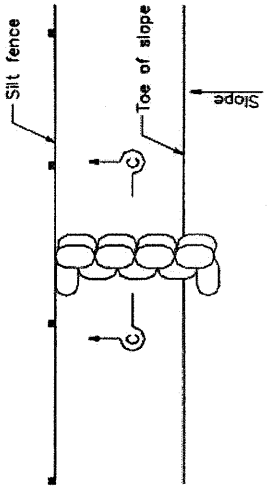

CROSS BARRIER DETAIL

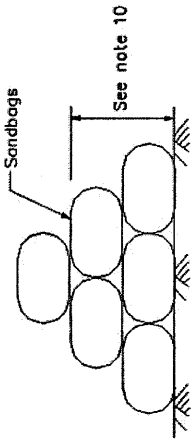

SECTION C–C

NOTES

1. Construct the length of each reach so that the change in base elevation along the reach does not exceed 1/3 the height of the linear barrier, in no case shall the reach length exceed 500'.
2. The last 8'–0" of fence shall be turned up slope.
3. Stake dimensions are nominal.
4. Dimension may vary to fit field condition.
5. Stakes shall be spaced at 8'–0" maximum and shall be positioned on downstream side of fence.
6. Stakes to overlap and fence fabric to fold around each stake one full turn. Secure fabric to stake with 4 staples.
7. Stakes shall be driven tightly together to prevent potential flow–through of sediment at joint. The tops of the stakes shall be secured with wire.
8. For end stake, fence fabric shall be folded around two stakes one full turn and secured with 4 staples.
9. Minimum 4 staples per stake. Dimensions shown are typical.
10. Cross barriers shall be a minimum of 1/3 and a maximum of 1/2 the height of the linear barrier.
11. Maintenance openings shall be constructed in a manner to ensure sediment remains behind silt fence.
12. Joining sections shall not be placed at sump locations.
13. Sandbag rows and layers shall be offset to eliminate gaps.

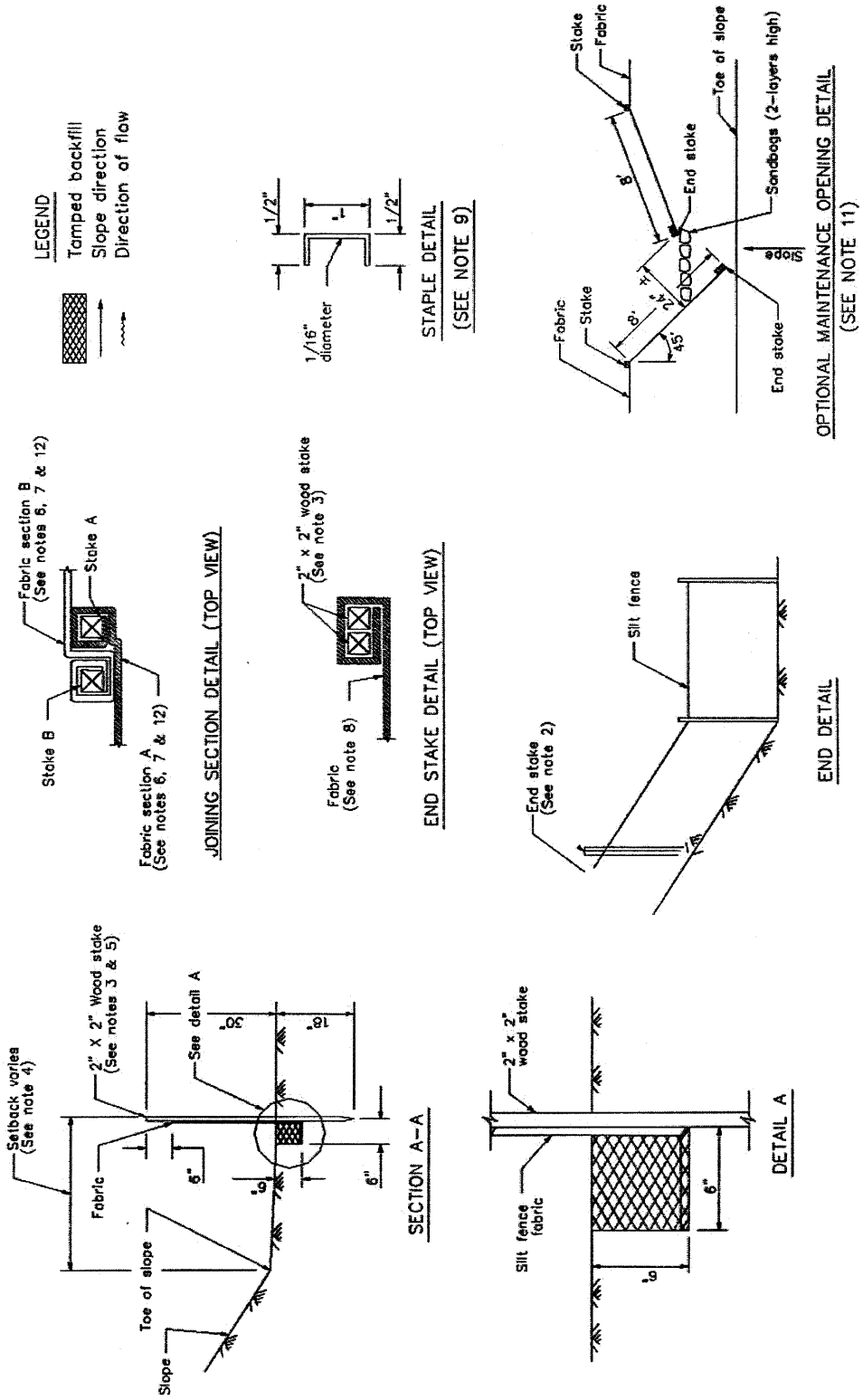
LEGEND
Tamped backfill
Slope direction
Direction of flow
Fabric section B (See notes 6, 7 & 12)
Stake A
Stake B
Fabric section A (See notes 6, 7 & 12)
JOINING SECTION DETAIL (TOP VIEW)
1/2"
1"
1/2"
1/16" diameter
STAPLE DETAIL
(SEE NOTE 9)
2" x 2" wood stake (See note 3)
Fabric (See note 8)
END STAKE DETAIL (TOP VIEW)
Stake
Fabric
Toe of slope
Sandbags (2-layers high)
End stake
8'
Slope
Fabric
Stake
8'
45°
End stake
OPTIONAL MAINTENANCE OPENING DETAIL
(SEE NOTE 11)
Silt fence
End stake (See note 2)
END DETAIL
Setback varies (See note 4)
2" X 2" Wood stake (See notes 3 & 5)
See detail A
30"
16"
Fabric
6"
6"
6"
Toe of slope
Slope
SECTION A-A
2" x 2" wood stake
Silt fence fabric
6"
6"
DETAIL A

Sediment Basin SE-2

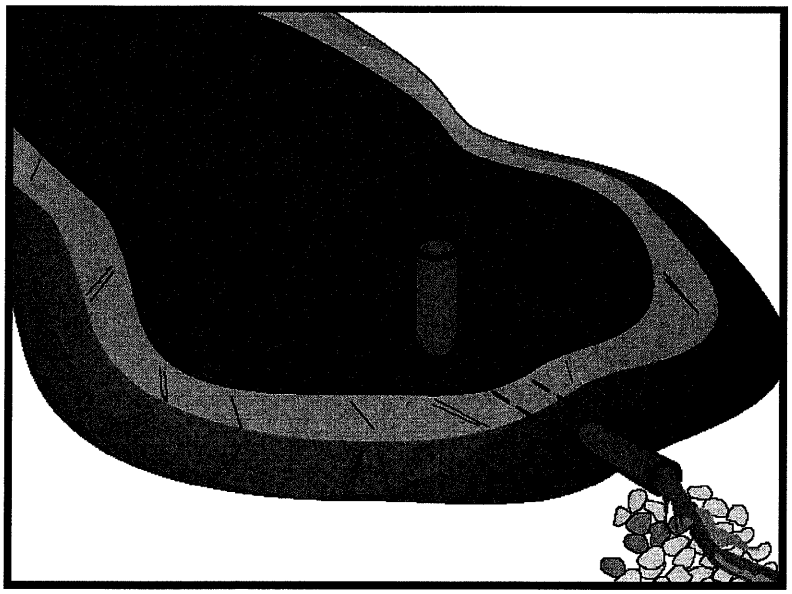

Objectives

EC	Erosion Control	
SE	Sediment Control	☑
TR	Tracking Control	
WE	Wind Erosion Control	
NS	Non-Stormwater Management Control	
WM	Waste Management and Materials Pollution Control	

Legend:

☑ **Primary Objective**

☒ **Secondary Objective**

Targeted Constituents

Sediment	☑
Nutrients	
Trash	☑
Metals	
Bacteria	
Oil and Grease	
Organics	

Potential Alternatives

SE-3 Sediment Trap (for smaller areas)

Description and Purpose

A sediment basin is a temporary basin formed by excavation or by constructing an embankment so that sediment-laden runoff is temporarily detained under quiescent conditions, allowing sediment to settle out before the runoff is discharged.

Suitable Applications

Sediment basins may be suitable for use on larger projects with sufficient space for constructing the basin. Sediment basins should be considered for use:

- Where sediment-laden water may enter the drainage system or watercourses
- On construction projects with disturbed areas during the rainy season
- At the outlet of disturbed watersheds between 5 acres and 75 acres
- At the outlet of large disturbed watersheds, as necessary
- Where post construction detention basins are required
- In association with dikes, temporary channels, and pipes used to convey runoff from disturbed areas

Limitations

Sediment basins must be installed only within the property limits and where failure of the structure will not result in loss of life, damage to homes or buildings, or interruption of use or service of

CASQA
CALIFORNIA STORMWATER QUALITY ASSOCIATION

public roads or utilities. In addition, sediment basins are attractive to children and can be very dangerous. Local ordinances regarding health and safety must be adhered to. If fencing of the basin is required, the type of fence and its location should be shown in the SWPPP and in the construction specifications.

- Generally, sediment basins are limited to drainage areas of 5 acres or more, but not appropriate for drainage areas greater than 75 acres.
- Sediment basins may become an "attractive nuisance" and care must be taken to adhere to all safety practices. If safety is a concern, basin may require protective fencing.
- Sediment basins designed according to this handbook are only practically effective in removing sediment down to about the medium silt size fraction. Sediment-laden runoff with smaller size fractions (fine silt and clay) may not be adequately treated unless chemical treatment is used in addition to the sediment basin.
- Sites with very fine sediments (fine silt and clay) may require longer detention times for effective sediment removal.
- Basins with a height of 25 ft or more or an impounding capacity of 50 ac-ft or more must obtain approval from Division of Safety of Dams.
- Standing water may cause mosquitoes or other pests to breed.
- Basins require large surface areas to permit settling of sediment. Size may be limited by the available area.

Implementation

General

A sediment basin is a controlled stormwater release structure formed by excavation or by construction of an embankment of compacted soil across a drainage way, or other suitable location. It is intended to trap sediment before it leaves the construction site. The basin is a temporary measure with a design life of 12 to 28 months in most cases and is to be maintained until the site area is permanently protected against erosion or a permanent detention basin is constructed.

Sediment basins are suitable for nearly all types of construction projects. Whenever possible, construct the sediment basins before clearing and grading work begins. Basins should be located at the stormwater outlet from the site but not in any natural or undisturbed stream. A typical application would include temporary dikes, pipes, and/or channels to divert runoff to the basin inlet.

Many development projects in California will be required by local ordinances to provide a stormwater detention basin for post-construction flood control, desilting, or stormwater pollution control. A temporary sediment basin may be constructed by rough grading the post-construction control basins early in the project.

Sediment basins trap 70-80 % of the sediment that flows into them if designed according to this handbook. Therefore, they should be used in conjunction with erosion control practices such as

temporary seeding, mulching, diversion dikes, etc., to reduce the amount of sediment flowing into the basin.

Planning

To improve the effectiveness of the basin, it should be located to intercept runoff from the largest possible amount of disturbed area. The best locations are generally low areas. Drainage into the basin can be improved by the use of earth dikes and drainage swales (see BMP EC-9). The basin must not be located in a stream but it should be located to trap sediment-laden runoff before it enters the stream. The basin should not be located where its failure would result in the loss of life or interruption of the use or service of public utilities or roads.

- Construct before clearing and grading work begins when feasible.
- Do not locate in a stream.
- Basin sites should be located where failure of the structure will not cause loss of life, damage to homes or buildings, or interruption of use or service of public roads or utilities.
- Large basins are subject to state and local dam safety requirements.
- Limit the contributing area to the sediment basin to only the runoff from the disturbed soil areas. Use temporary concentrated flow conveyance controls to divert runoff from undisturbed areas away from the sediment basin.
- The basin should be located: (1) by excavating a suitable area or where a low embankment can be constructed across a swale, (2) where post-construction (permanent) detention basins will be constructed, and (3) where the basins can be maintained on a year-round basis to provide access for maintenance, including sediment removal and sediment stockpiling in a protected area, and to maintain the basin to provide the required capacity.

Design

Sediment basins must be designed in accordance with Section A of the State of California NPDES General Permit for Stormwater Discharges Associated with Construction Activities (General Permit) where sediment basins are the only control measure proposed for the site. If there is insufficient area to construct a sediment basin in accordance with the General Permit requirements, then the alternate design standards specified herein may be used.

Sediment basins designed per the General Permit shall be designed as follows:

Option 1:

Pursuant to local ordinance for sediment basin design and maintenance, provided that the design efficiency is as protective or more protective of water quality than Option 3.

OR

Option 2:

Sediment basin(s), as measured from the bottom of the basin to the principal outlet, shall have at least a capacity equivalent to 3,600 cubic feet (133 yd^3) of storage per acre draining into the sediment basin. The length of the basin shall be more than twice the width of the basin. The

length is determined by measuring the distance between the inlet and the outlet; and the depth must not be less than 3 ft nor greater than 5 ft for safety reasons and for maximum efficiency.

OR

Option 3:
Sediment basin(s) shall be designed using the standard equation:

$$As=1.2Q/Vs \qquad \text{(Eq. 1)}$$

Where:

As = Minimum surface area for trapping soil particles of a certain size

Vs = Settling velocity of the design particle size chosen

Q = C I A

Where

Q = Discharge rate measured in cubic feet per second

C = Runoff coefficient

I = Precipitation intensity for the 10-year, 6-hour rain event

A = Area draining into the sediment basin in acres

The design particle size shall be the smallest soil grain size determined by wet sieve analysis, or the fine silt sized (0.01 mm [or 0.0004 in.]) particle, and the *Vs* used shall be 100 percent of the calculated settling velocity.

The length is determined by measuring the distance between the inlet and the outlet; the length shall be more than twice the dimension as the width; the depth shall not be less than 3 ft nor greater than 5 ft for safety reasons and for maximum efficiency (2 ft of sediment storage, 2 ft of capacity). The basin(s) shall be located on the site where it can be maintained on a year-round basis and shall be maintained on a schedule to retain the 2 ft of capacity.

OR

Option 4:
The use of an equivalent surface area design or equation, provided that the design efficiency is as protective or more protective of water quality than Option 3.

Other design considerations are:

- The volume of the settling zone should be sized to capture runoff from a 2-year storm or other appropriate design storms specified by the local agency. A detention time of 24 to 40 hours should allow 70 to 80 % of sediment to settle.
- The basin volume consists of two zones:
  - A sediment storage zone at least 1 ft deep.
  - A settling zone at least 2 ft deep.
- The length to settling depth ratio (L/SD) should be less than 200.
- Sediment basins are best used in conjunction with erosion controls. Sediment basins that will be used as the only means of treatment, without upstream erosion and sediment controls, must be designed according to the four options required by the General Permit (see Options 1-4 above). Sediment basins that are used in conjunction with upstream erosion and sediment controls should be designed to have a capacity equivalent to 67 yd^3 of sediment storage per acre of contributory area.
- The length of the basin should be more than twice the width of the basin; the length should be determined by measuring the distance between the inlet and the outlet.
- The depth must be no less than 3 ft.
- Basins with an impounding levee greater than 4.5 ft tall, measured from the lowest point to the impounding area to the highest point of the levee, and basins capable of impounding more than 35,000 ft^3, should be designed by a Registered Civil Engineer. The design should include maintenance requirements, including sediment and vegetation removal, to ensure continuous function of the basin outlet and bypass structures.
- Basins should be designed to drain within 72 hours following storm events. If a basin fails to drain within 72 hours, it must be pumped dry.
- Sediment basins, regardless of size and storage volume, should include features to accommodate overflow or bypass flows that exceed the design storm event.
  - Include an emergency spillway to accommodate flows not carried by the principal spillway. The spillway should consist of an open channel (earthen or vegetated) over undisturbed material (not fill) or constructed of a non-erodible riprap.
  - The spillway control section, which is a level portion of the spillway channel at the highest elevation in the channel, should be a minimum of 20 ft in length.
- Rock or vegetation should be used to protect the basin inlet and slopes against erosion.
- A forebay, constructed upstream of the basin may be provided to remove debris and larger particles.

- The outflow from the sediment basin should be provided with velocity dissipation devices (see BMP EC-10) to prevent erosion and scouring of the embankment and channel.
- Basin inlets should be located to maximize travel distance to the basin outlet.
- The principal outlet should consist of a corrugated metal, high density polyethylene (HDPE), or reinforced concrete riser pipe with dewatering holes and an anti-vortex device and trash rack attached to the top of the riser, to prevent floating debris from flowing out of the basin or obstructing the system. This principal structure should be designed to accommodate the inflow design storm.
- A rock pile or rock-filled gabions can serve as alternatives to the debris screen; although the designer should be aware of the potential for extra maintenance involved should the pore spaces in the rock pile clog.
- The outlet structure should be placed on a firm, smooth foundation with the base securely anchored with concrete or other means to prevent floatation.
- Attach riser pipe (watertight connection) to a horizontal pipe (barrel). Provide anti-seep collars on the barrel.
- Cleanout level should be clearly marked on the riser pipe.
- Proper hydraulic design of the outlet is critical to achieving the desired performance of the basin. The outlet should be designed to drain the basin within 24 to 72 hours (also referred to as "drawdown time"). The 24-hour limit is specified to provide adequate settling time; the 72-hour limit is specified to mitigate vector control concerns.
- The two most common outlet problems that occur are: (1) the capacity of the outlet is too great resulting in only partial filling of the basin and drawdown time less than designed for; and (2) the outlet clogs because it is not adequately protected against trash and debris. To avoid these problems, the following outlet types are recommended for use: (1) a single orifice outlet with or without the protection of a riser pipe, and (2) perforated riser. Design guidance for single orifice and perforated riser outlets follow:
  - *Flow Control Using a Single Orifice At The Bottom Of The Basin (Figure 1)*: The outlet control orifice should be sized using the following equation:

$$a = \frac{2A(H-Ho)^{0.5}}{3600CT(2g)^{0.5}} = \frac{(7x10^{-5})A(H-Ho)^{0.5}}{CT} \qquad \text{(Eq. 2)}$$

where:

a = area of orifice (ft^2)

A = surface area of the basin at mid elevation (ft^2)

C = orifice coefficient

T = drawdown time of full basin (hrs)

g = gravity (32.2 ft/s²)

H = elevation when the basin is full (ft)

Ho = final elevation when basin is empty (ft)

With a drawdown time of 40 hours, the equation becomes:

$$a = \frac{(1.75x10^{-6})A(H - Ho)^{0.5}}{C} \qquad \text{(Eq. 3)}$$

- *Flow Control Using Multiple Orifices (see Figure2):*

$$a_t = \frac{2A(h_{max})}{3600CT(2g[h_{max} - h_{centroid\ of\ orifices}])^{0.5}} \qquad \text{(Eq. 4)}$$

With terms as described above except:

a_t = total area of orifices

h_{max} = maximum height from lowest orifice to the maximum water surface (ft)

$h_{centroid\ of\ orifices}$ = height from the lowest orifice to the centroid of the orifice configuration (ft)

Allocate the orifices evenly on two rows; separate the holes by 3x hole diameter vertically, and by 120 degrees horizontally (refer to Figure 2).

Because basins are not maintained for infiltration, water loss by infiltration should be disregarded when designing the hydraulic capacity of the outlet structure.

Care must be taken in the selection of "C"; 0.60 is most often recommended and used. However, based on actual tests, GKY (1989), "Outlet Hydraulics of Extended Detention Facilities for Northern Virginia Planning District Commission", recommends the following:

C = 0.66 for thin materials; where the thickness is equal to or less than the orifice diameter, or

C = 0.80 when the material is thicker than the orifice diameter

Installation

- Securely anchor and install an anti-seep collar on the outlet pipe/riser and provide an emergency spillway for passing major floods (see local flood control agency).
- Areas under embankments must be cleared and stripped of vegetation.
- Chain link fencing should be provided around each sediment basin to prevent unauthorized entry to the basin or if safety is a concern.

Costs

Average annual costs for installation and maintenance (2 year useful life) are:

- Basin less than 50,000 ft^3: Range, \$0.24 - \$1.58/ft^3. Average, \$0.73 per ft^3. \$400 - \$2,400, \$1,200 average per drainage acre.
- Basin size greater than 50,000 ft^3: Range, \$0.12 – \$0.48/ft^3. Average, \$0.36 per ft^3. \$200 - \$800, \$600 average per drainage acre.

Inspection and Maintenance

- Inspect BMPs prior to forecast rain, daily during extended rain events, after rain events, weekly during the rainy season, and at two-week intervals during the non-rainy season.
- Examine basin banks for seepage and structural soundness.
- Check inlet and outlet structures and spillway for any damage or obstructions. Repair damage and remove obstructions as needed.
- Check inlet and outlet area for erosion and stabilize if required.
- Check fencing for damage and repair as needed.
- Sediment that accumulates in the BMP must be periodically removed in order to maintain BMP effectiveness. Sediment should be removed when sediment accumulation reaches one-half the designated sediment storage volume. Sediment removed during maintenance may be incorporated into earthwork on the site or disposed of at appropriate locations.
- Remove standing water from basin within 72 hours after accumulation.
- BMPs that require dewatering shall be continuously attended while dewatering takes place. Dewatering BMPs shall be implemented at all times during dewatering activities.
- To minimize vector production:
  - Remove accumulation of live and dead floating vegetation in basins during every inspection.
  - Remove excessive emergent and perimeter vegetation as needed or as advised by local or state vector control agencies.

References

A Current Assessment of Urban Best Management Practices: Techniques for Reducing Nonpoint Source Pollution in the Coastal Zones, Metropolitan Washington Council of Governments, March 1992.

Draft-Sedimentation and Erosion Control, an Inventory of Current Practices, USEPA. April 1990.

Guidelines for the Design and Construction of Small Embankment Dams, Division of Safety of Dams, California Department of Water Resources, March 1986.

Manual of Standards of Erosion and Sediment Control Measures, Association of Bay Area Governments, May 1995.

McLean, J., 2000. Mosquitoes in Constructed Wetlands: A Management Bugaboo? In T.R. Schueler and H.K. Holland [eds.], The Practice of Watershed Protection. pp. 29-33. Center for Watershed Protection, Ellicott City, MD, 2000.

Metzger, M.E., D. F. Messer, C. L. Beitia, C. M. Myers, and V. L. Kramer. The dark site of stormwater runoff management: disease vectors associated with structural BMPs, 2002.

National Management Measures to Control Nonpoint Source Pollution from Urban Areas, United States Environmental Protection Agency, 2002.

Proposed Guidance Specifying Management Measures for Sources of Nonpoint Pollution in Coastal Water, Work Group-Working Paper, USEPA, April 1992.

Stormwater Quality Handbooks - Construction Site Best Management Practices (BMPs) Manual, State of California Department of Transportation (Caltrans), November 2000.

Stormwater Management of the Puget Sound Basin, Technical Manual, Publication #91-75, Washington State Department of Ecology, February 1992.

U.S. Environmental Protection Agency (USEPA). Guidance Specifying Management Measures for Nonpoint Pollution in Coastal Waters. EPA 840-B-9-002. U.S. Environmental Protection Agency, Office of Water, Washington, DC, 1993

Water Quality Management Plan for the Lake Tahoe Region, Volume II Handbook of Management Practices, Tahoe Regional Planning Agency, November 1988.

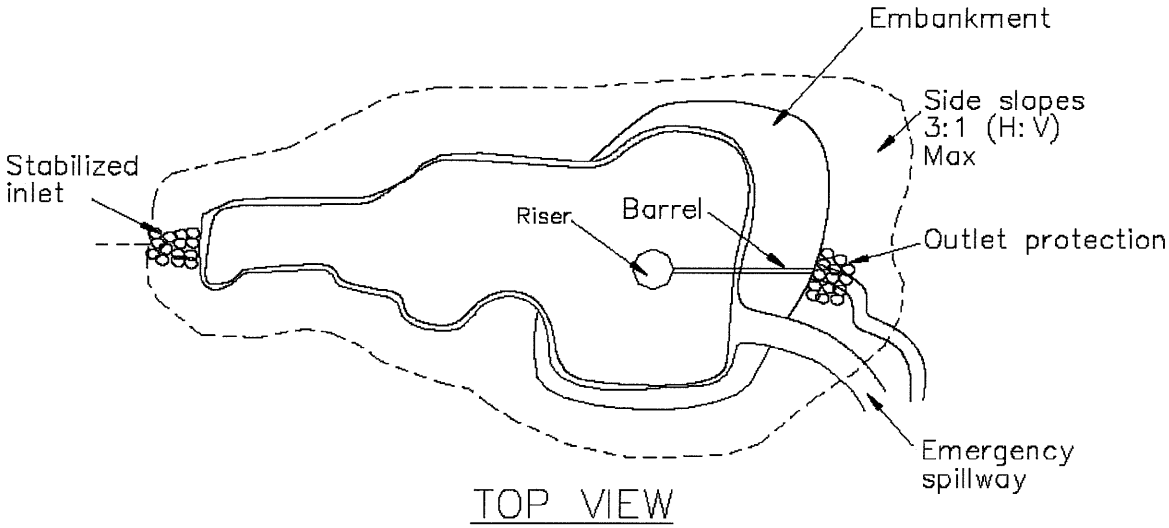

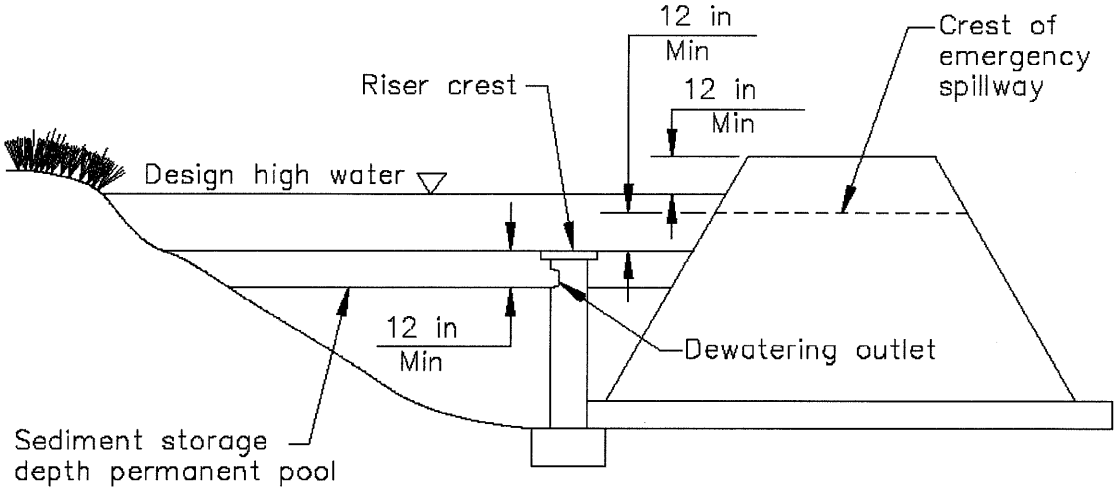

NOTE:
This outlet provides no drainage for permanent pool.

FIGURE 1: TYPICAL TEMPORARY SEDIMENT BASIN
SINGLE ORIFICE DESIGN
NOT TO SCALE

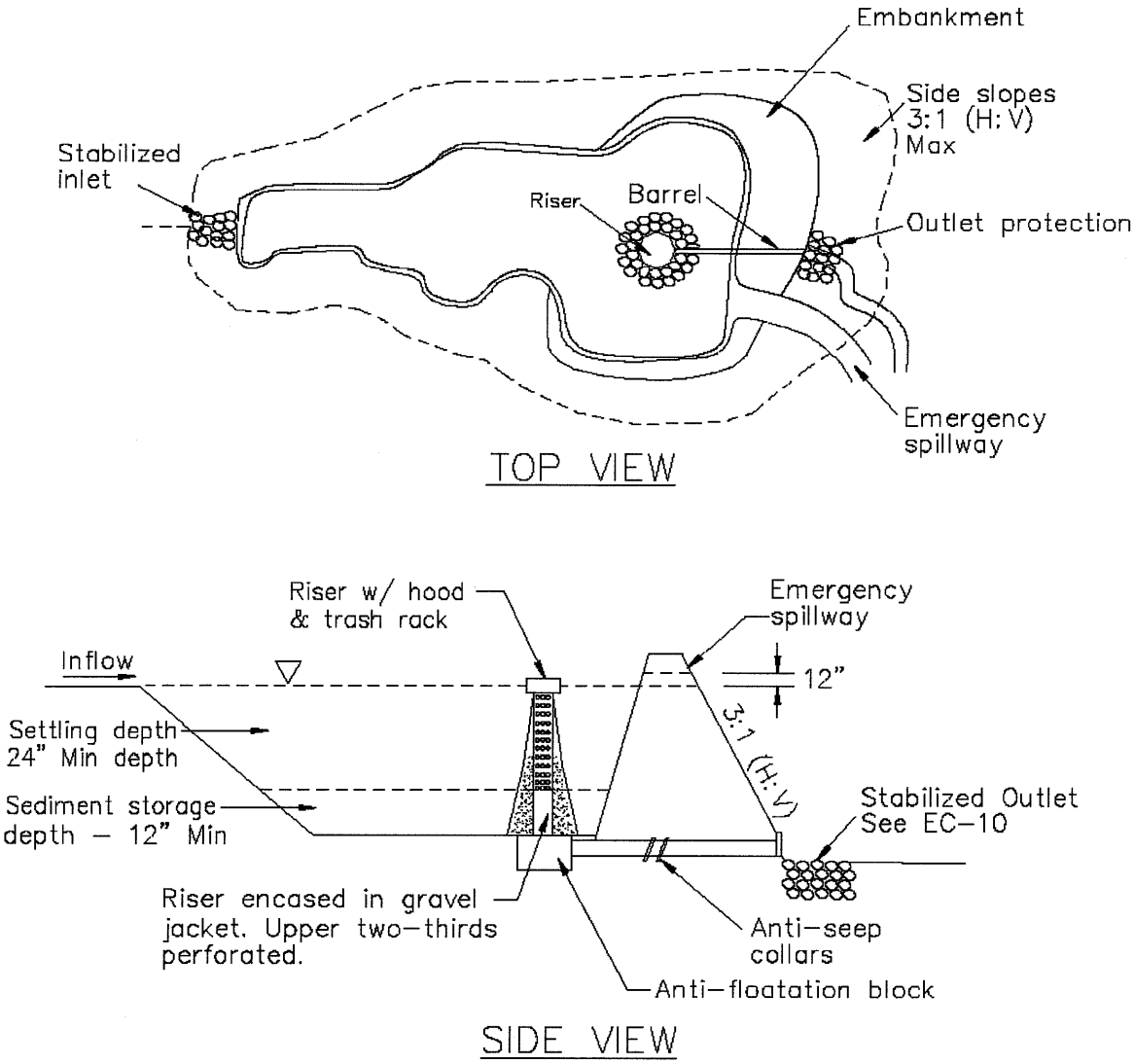

FIGURE 2: TYPICAL TEMPORARY SEDIMENT BASIN

MULTIPLE ORIFICE DESIGN

NOT TO SCALE

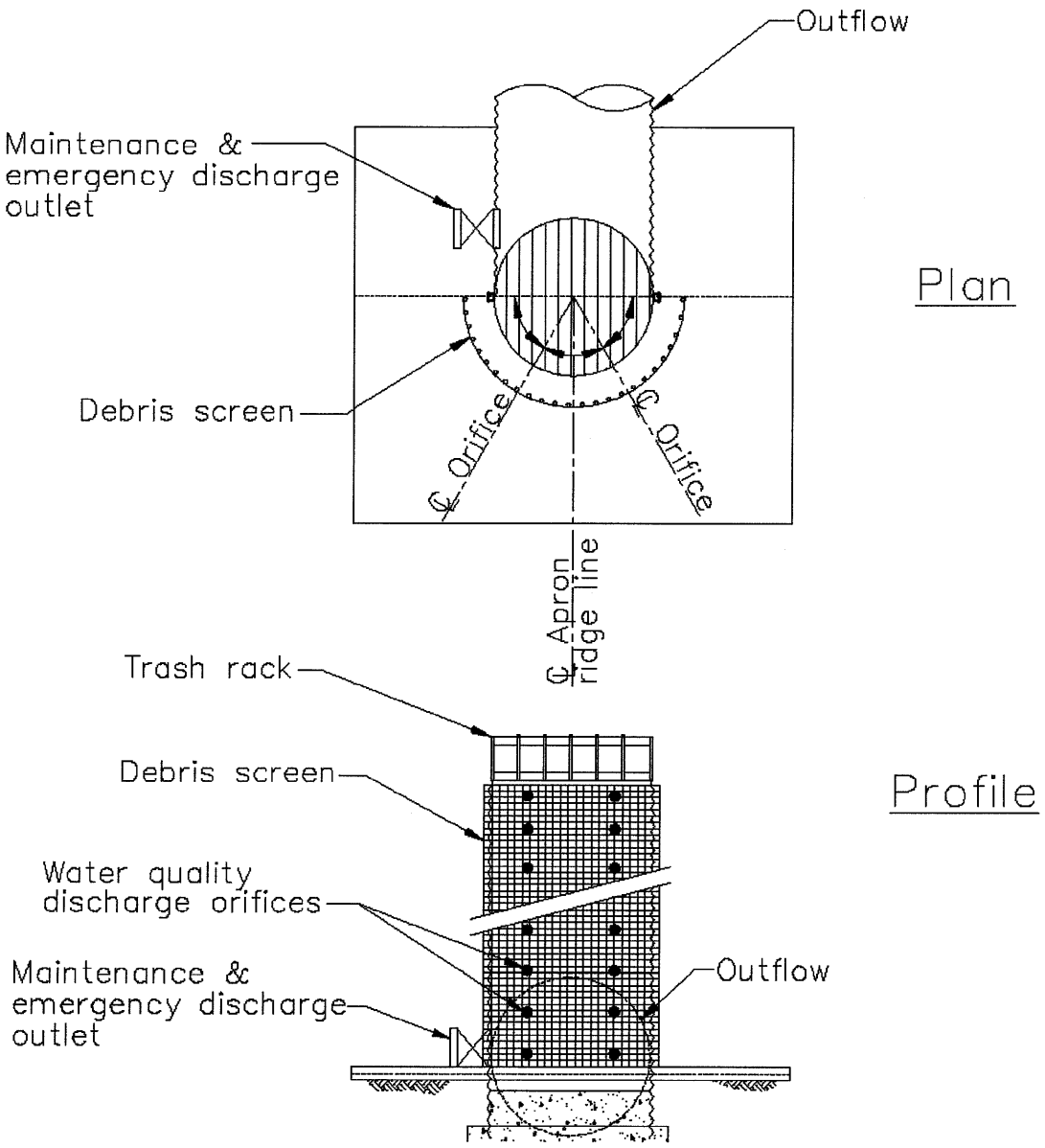

FIGURE 3: MULTIPLE ORIFICE OUTLET RISER

NOT TO SCALE

Sediment Trap SE-3

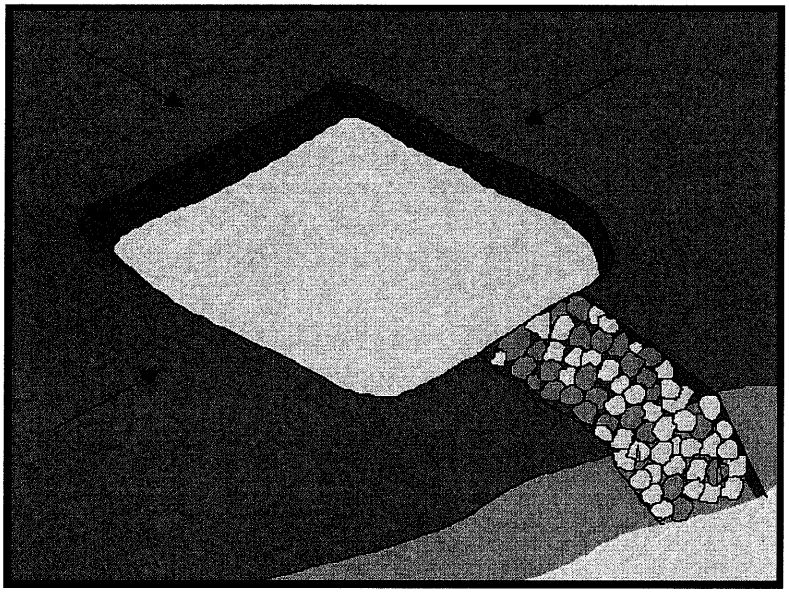

Objectives

EC	Erosion Control	
SE	Sediment Control	☑
TR	Tracking Control	
WE	Wind Erosion Control	
NS	Non-Stormwater Management Control	
WM	Waste Management and Materials Pollution Control	

Legend:

☑ **Primary Objective**

☒ **Secondary Objective**

Targeted Constituents

Sediment	☑
Nutrients	
Trash	☑
Metals	
Bacteria	
Oil and Grease	
Organics	

Potential Alternatives

SE-2 Sediment Basin (for larger areas)

Description and Purpose

A sediment trap is a containment area where sediment-laden runoff is temporarily detained under quiescent conditions, allowing sediment to settle out or before the runoff is discharged. Sediment traps are formed by excavating or constructing an earthen embankment across a waterway or low drainage area.

Suitable Applications

Sediment traps should be considered for use:

- At the perimeter of the site at locations where sediment-laden runoff is discharged offsite.
- At multiple locations within the project site where sediment control is needed.
- Around or upslope from storm drain inlet protection measures.
- Sediment traps may be used on construction projects where the drainage area is less than 5 acres. Traps would be placed where sediment-laden stormwater may enter a storm drain or watercourse. SE-2, Sediment Basins, must be used for drainage areas greater than 5 acres.
- As a supplemental control, sediment traps provide additional protection for a water body or for reducing sediment before it enters a drainage system.

CASQA
CALIFORNIA STORMWATER QUALITY ASSOCIATION

Limitations

- Requires large surface areas to permit infiltration and settling of sediment.
- Not appropriate for drainage areas greater than 5 acres.
- Only removes large and medium sized particles and requires upstream erosion control.
- Attractive and dangerous to children, requiring protective fencing.
- Conducive to vector production.
- Should not be located in live streams.

Implementation

Design

A sediment trap is a small temporary ponding area, usually with a gravel outlet, formed by excavation or by construction of an earthen embankment. Its purpose is to collect and store sediment from sites cleared or graded during construction. It is intended for use on small drainage areas with no unusual drainage features and projected for a quick build-out time. It should help in removing coarse sediment from runoff. The trap is a temporary measure with a design life of approximately six months to one year and is to be maintained until the site area is permanently protected against erosion by vegetation and/or structures.

Sediment traps should be used only for small drainage areas. If the contributing drainage area is greater than 5 acres, refer to SE-2, Sediment Basins, or subdivide the catchment area into smaller drainage basins.

Sediment usually must be removed from the trap after each rainfall event. The SWPPP should detail how this sediment is to be disposed of, such as in fill areas onsite, or removal to an approved offsite dump. Sediment traps used as perimeter controls should be installed before any land disturbance takes place in the drainage area.

Sediment traps are usually small enough that a failure of the structure would not result in a loss of life, damage to home or buildings, or interruption in the use of public roads or utilities. However, sediment traps are attractive to children and can be dangerous. The following recommendations should be implemented to reduce risks:

- Install continuous fencing around the sediment trap or pond. Consult local ordinances regarding requirements for maintaining health and safety.
- Restrict basin side slopes to 3:1 or flatter.

Sediment trap size depends on the type of soil, size of the drainage area, and desired sediment removal efficiency (see SE-2, Sediment Basin). As a rule of thumb, the larger the basin volume the greater the sediment removal efficiency. Sizing criteria are typically established under the local grading ordinance or equivalent. The runoff volume from a 2-year storm is a common design criteria for a sediment trap. The sizing criteria below assume that this runoff volume is 0.042 acre-ft/acre (0.5 in. of runoff). While the climatic, topographic, and soil type extremes make it difficult to establish a statewide standard, the following criteria should trap moderate to high amounts of sediment in most areas of California:

- Locate sediment traps as near as practical to areas producing the sediment.
- Trap should be situated according to the following criteria: (1) by excavating a suitable area or where a low embankment can be constructed across a swale, (2) where failure would not cause loss of life or property damage, and (3) to provide access for maintenance, including sediment removal and sediment stockpiling in a protected area.
- Trap should be sized to accommodate a settling zone and sediment storage zone with recommended minimum volumes of 67 yd^3/acre and 33 yd^3/acre of contributing drainage area, respectively, based on 0.5 in. of runoff volume over a 24-hour period. In many cases, the size of an individual trap is limited by available space. Multiple traps or additional volume may be required to accommodate specific rainfall, soil, and site conditions.
- Traps with an impounding levee greater than 4.5 ft tall, measured from the lowest point to the impounding area to the highest point of the levee, and traps capable of impounding more than 35,000 ft^3, should be designed by a Registered Civil Engineer. The design should include maintenance requirements, including sediment and vegetation removal, to ensure continuous function of the trap outlet and bypass structures.
- The outlet pipe or open spillway must be designed to convey anticipated peak flows.
- Use rock or vegetation to protect the trap outlets against erosion.
- Fencing should be provided to prevent unauthorized entry.

Installation

Sediment traps can be constructed by excavating a depression in the ground or creating an impoundment with a small embankment. Sediment traps should be installed outside the area being graded and should be built prior to the start of the grading activities or removal of vegetation. To minimize the area disturbed by them, sediment traps should be installed in natural depressions or in small swales or drainage ways. The following steps must be followed during installation:

- The area under the embankment must be cleared, grubbed, and stripped of any vegetation and root mat. The pool area should be cleared.
- The fill material for the embankment must be free of roots or other woody vegetation as well as oversized stones, rocks, organic material, or other objectionable material. The embankment may be compacted by traversing with equipment while it is being constructed.
- All cut-and-fill slopes should be 3:1 or flatter.
- When a riser is used, all pipe joints must be watertight.
- When a riser is used, at least the top two-thirds of the riser should be perforated with 0.5 in. diameter holes spaced 8 in. vertically and 10 to 12 in. horizontally. See SE-2, Sediment Basin.
- When an earth or stone outlet is used, the outlet crest elevation should be at least 1 ft below the top of the embankment.

- When crushed stone outlet is used, the crushed stone used in the outlet should meet AASHTO M43, size No. 2 or 24, or its equivalent such as MSHA No. 2. Gravel meeting the above gradation may be used if crushed stone is not available.

Costs

Average annual cost per installation and maintenance (18 month useful life) is $0.73 per ft^3 ($1,300 per drainage acre). Maintenance costs are approximately 20% of installation costs.

Inspection and Maintenance

- Inspect BMPs prior to forecast rain, daily during extended rain events, after rain events, weekly during the rainy season, and at two-week intervals during the non-rainy season.
- Inspect outlet area for erosion and stabilize if required.
- Inspect trap banks for seepage and structural soundness, repair as needed.
- Inspect outlet structure and spillway for any damage or obstructions. Repair damage and remove obstructions as needed.
- Inspect fencing for damage and repair as needed.
- Inspect the sediment trap for area of standing water during every visit. Corrective measures should be taken if the BMP does not dewater completely in 72 hours or less to prevent vector production.
- Sediment that accumulates in the BMP must be periodically removed in order to maintain BMP effectiveness. Sediment should be removed when the sediment accumulation reaches one-third of the trap capacity. Sediment removed during maintenance may be incorporated into earthwork on the site or disposed of at an appropriate location.
- Remove vegetation from the sediment trap when first detected to prevent pools of standing water and subsequent vector production.
- BMPs that require dewatering shall be continuously attended while dewatering takes place. Dewatering BMPs shall be implemented at all times during dewatering activities.

References

Brown, W., and T. Schueler. The Economics of Stormwater BMPs in the Mid-Atlantic Region. Prepared for Chesapeake Research Consortium, Edgewater, MD, by the Center for Watershed Protection, Ellicott City, MD, 1997.

Draft – Sedimentation and Erosion Control, an Inventory of Current Practices, USEPA, April 1990.

Manual of Standards of Erosion and Sediment Control Measures, Association of Bay Area Governments, May 1995.

Metzger, M.E., D.F. Messer, C.L. Beitia, C.M. Myers, and V.L. Kramer, The Dark Side of Stormwater Runoff Management: Disease Vectors Associated with Structural BMPs, 2002.

National Management Measures to Control Nonpoint Source Pollution from Urban Areas, United States Environmental Protection Agency, 2002.

Proposed Guidance Specifying Management Measures for Sources of Nonpoint Pollution in Coastal Waters, Work Group-Working Paper, USEPA, April 1992.

Stormwater Quality Handbooks - Construction Site Best Management Practices (BMPs) Manual, State of California Department of Transportation (Caltrans), November 2000.

Stormwater Management Manual for The Puget Sound Basin, Washington State Department of Ecology, Public Review Draft, 1991.

U.S. Environmental Protection Agency (USEPA). Guidance Specifying Management Measures for Nonpoint Pollution in Coastal Waters. EPA 840-B-9-002. U.S. Environmental Protection Agency, Office of Water, Washington, DC, 1993.

Water Quality Management Plan for the Lake Tahoe Region, Volume II, Handbook of Management Practices, Tahoe Regional Planning Agency, November 1988.

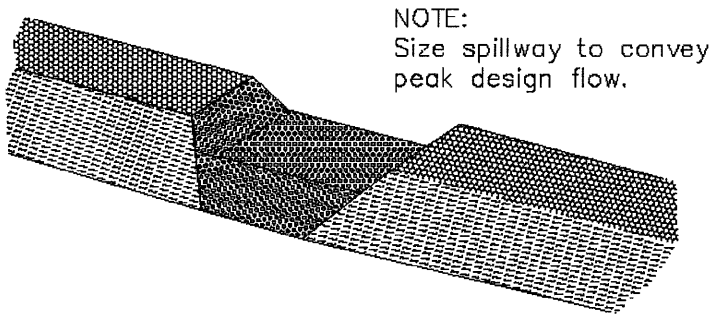

TYPICAL OPEN SPILLWAY

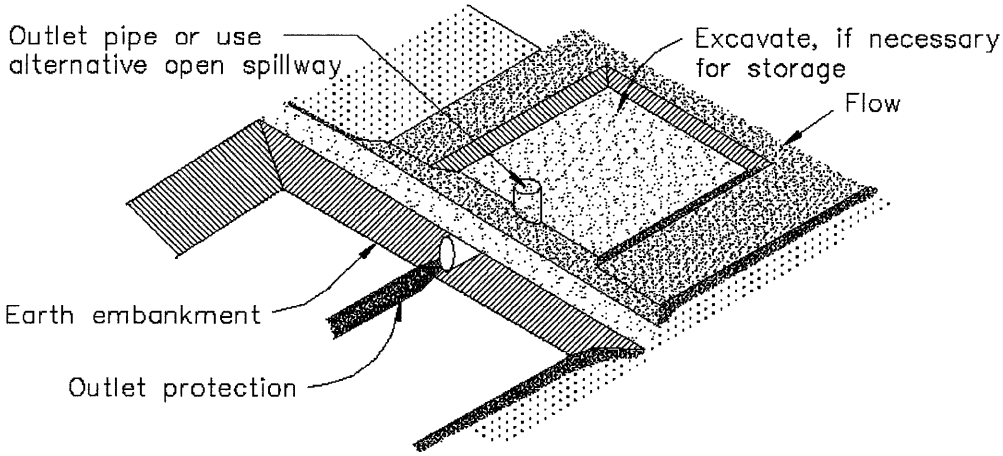

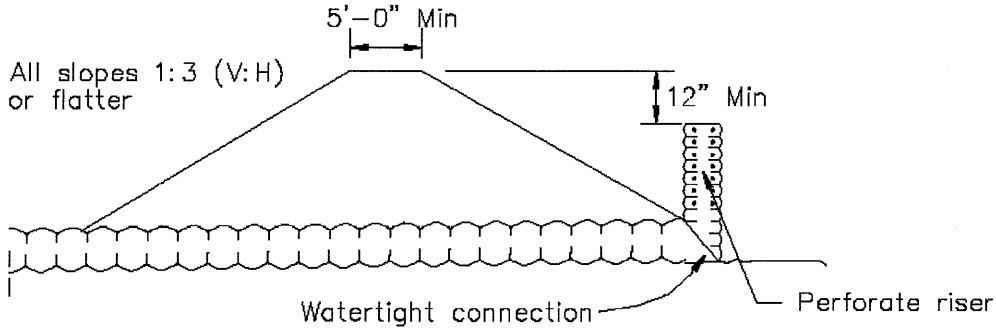

EMBANKMENT SECTION THRU RISER

TYPICAL SEDIMENT TRAP
NOT TO SCALE

Fiber Rolls

SE-5

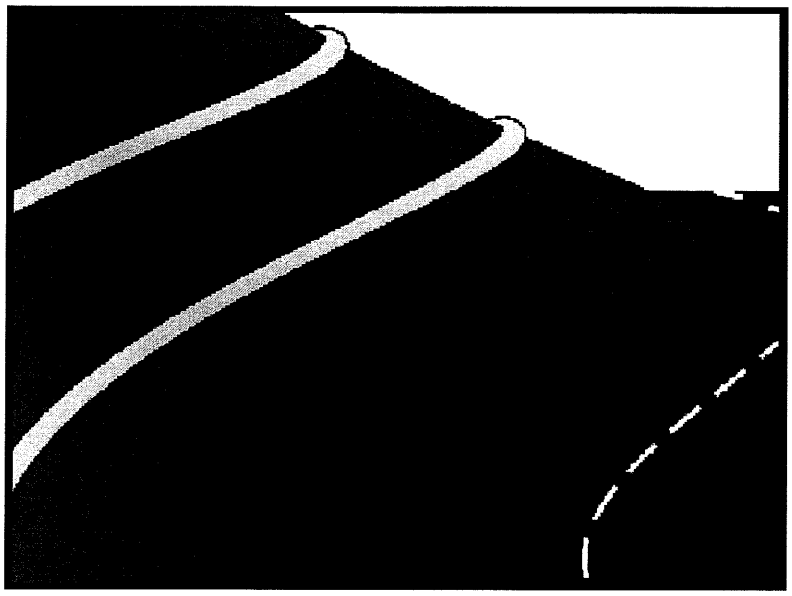

Objectives

EC	Erosion Control	☒
SE	Sediment Control	☑
TR	Tracking Control	
WE	Wind Erosion Control	
NS	Non-Stormwater Management Control	
WM	Waste Management and Materials Pollution Control	

Legend:

☑ **Primary Objective**

☒ **Secondary Objective**

Targeted Constituents

Sediment	☑
Nutrients	
Trash	
Metals	
Bacteria	
Oil and Grease	
Organics	

Potential Alternatives

SE-1 Silt Fence

SE-6 Gravel Bag Berm

SE-8 Sandbag Barrier

SE-9 Straw Bale Barrier

Description and Purpose

A fiber roll consists of straw, flax, or other similar materials bound into a tight tubular roll. When fiber rolls are placed at the toe and on the face of slopes, they intercept runoff, reduce its flow velocity, release the runoff as sheet flow, and provide removal of sediment from the runoff. By interrupting the length of a slope, fiber rolls can also reduce erosion.

Suitable Applications

Fiber rolls may be suitable:

- Along the toe, top, face, and at grade breaks of exposed and erodible slopes to shorten slope length and spread runoff as sheet flow
- At the end of a downward slope where it transitions to a steeper slope
- Along the perimeter of a project
- As check dams in unlined ditches
- Down-slope of exposed soil areas
- Around temporary stockpiles

Limitations

- Fiber rolls are not effective unless trenched

CASQA
CALIFORNIA STORMWATER QUALITY ASSOCIATION

- Fiber rolls at the toe of slopes greater than 5:1 (H:V) should be a minimum of 20 in. diameter or installations achieving the same protection (i.e. stacked smaller diameter fiber rolls, etc.).
- Difficult to move once saturated.
- If not properly staked and trenched in, fiber rolls could be transported by high flows.
- Fiber rolls have a very limited sediment capture zone.
- Fiber rolls should not be used on slopes subject to creep, slumping, or landslide.

Implementation

Fiber Roll Materials

- Fiber rolls should be either prefabricated rolls or rolled tubes of erosion control blanket.

Assembly of Field Rolled Fiber Roll

- Roll length of erosion control blanket into a tube of minimum 8 in. diameter.
- Bind roll at each end and every 4 ft along length of roll with jute-type twine.

Installation

- Locate fiber rolls on level contours spaced as follows:
  - Slope inclination of 4:1 (H:V) or flatter: Fiber rolls should be placed at a maximum interval of 20 ft.
  - Slope inclination between 4:1 and 2:1 (H:V): Fiber Rolls should be placed at a maximum interval of 15 ft. (a closer spacing is more effective).
  - Slope inclination 2:1 (H:V) or greater: Fiber Rolls should be placed at a maximum interval of 10 ft. (a closer spacing is more effective).
- Turn the ends of the fiber roll up slope to prevent runoff from going around the roll.
- Stake fiber rolls into a 2 to 4 in. deep trench with a width equal to the diameter of the fiber roll.
  - Drive stakes at the end of each fiber roll and spaced 4 ft maximum on center.
  - Use wood stakes with a nominal classification of 0.75 by 0.75 in. and minimum length of 24 in.
- If more than one fiber roll is placed in a row, the rolls should be overlapped, not abutted.

Removal

- Fiber rolls are typically left in place.

- If fiber rolls are removed, collect and dispose of sediment accumulation, and fill and compact holes, trenches, depressions or any other ground disturbance to blend with adjacent ground.

Costs

Material costs for fiber rolls range from $20 - $30 per 25 ft roll.

Inspection and Maintenance

- Inspect BMPs prior to forecast rain, daily during extended rain events, after rain events, weekly during the rainy season, and at two-week intervals during the non-rainy season.
- Repair or replace split, torn, unraveling, or slumping fiber rolls.
- If the fiber roll is used as a sediment capture device, or as an erosion control device to maintain sheet flows, sediment that accumulates in the BMP must be periodically removed in order to maintain BMP effectiveness. Sediment should be removed when sediment accumulation reaches one-half the designated sediment storage depth, usually one-half the distance between the top of the fiber roll and the adjacent ground surface. Sediment removed during maintenance may be incorporated into earthwork on the site of disposed at an appropriate location.
- If fiber rolls are used for erosion control, such as in a mini check dam, sediment removal should not be required as long as the system continues to control the grade. Sediment control BMPs will likely be required in conjunction with this type of application.

References

Stormwater Quality Handbooks - Construction Site Best Management Practices (BMPs) Manual, State of California Department of Transportation (Caltrans), November 2000.

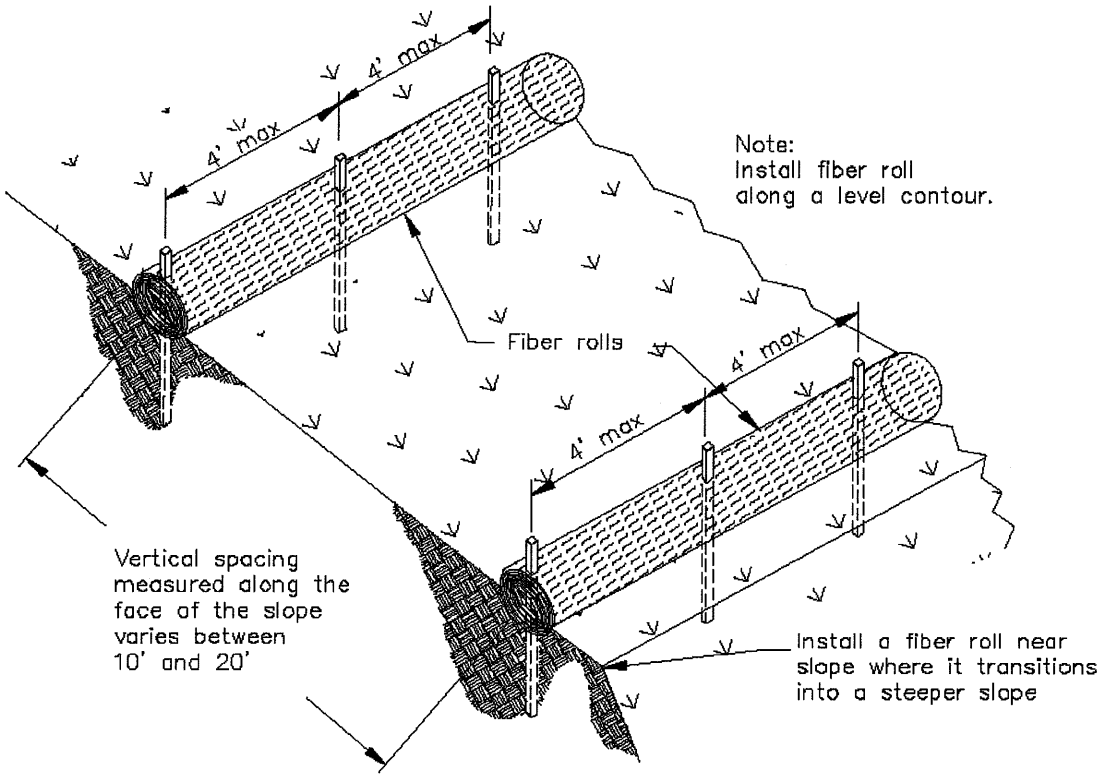

TYPICAL FIBER ROLL INSTALLATION

N.T.S.

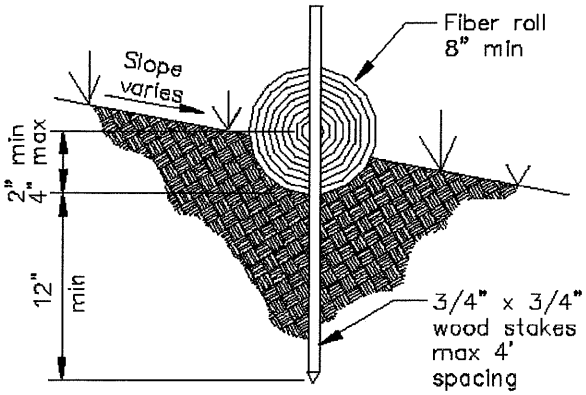

ENTRENCHMENT DETAIL

N.T.S.

Gravel Bag Berm

SE-6

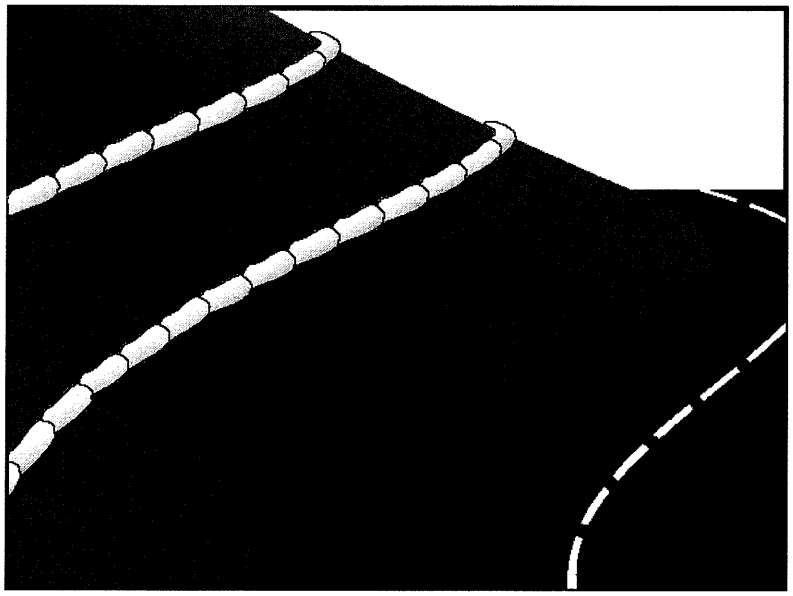

Objectives

EC	Erosion Control	☒
SE	Sediment Control	☑
TR	Tracking Control	
WE	Wind Erosion Control	
NS	Non-Stormwater Management Control	
WM	Waste Management and Materials Pollution Control	

Legend:

☑ **Primary Objective**

☒ **Secondary Objective**

Targeted Constituents

Sediment	☑
Nutrients	
Trash	
Metals	
Bacteria	
Oil and Grease	
Organics	

Potential Alternatives

SE-1 Silt Fence

SE-5 Fiber Roll

SE-8 Sandbag Barrier

SE-9 Straw Bale Barrier

Description and Purpose

A gravel bag berm is a series of gravel-filled bags placed on a level contour to intercept sheet flows. Gravel bags pond sheet flow runoff, allowing sediment to settle out, and release runoff slowly as sheet flows, preventing erosion.

Suitable Applications

Gravel bag berms may be suitable:

- As a linear sediment control measure:
  - Below the toe of slopes and erodible slopes
  - As sediment traps at culvert/pipe outlets
  - Below other small cleared areas
  - Along the perimeter of a site
  - Down slope of exposed soil areas
  - Around temporary stockpiles and spoil areas
  - Parallel to a roadway to keep sediment off paved areas
  - Along streams and channels
- As linear erosion control measure:

CASQA
CALIFORNIA STORMWATER QUALITY ASSOCIATION

- Along the face and at grade breaks of exposed and erodible slopes to shorten slope length and spread runoff as sheet flow
- At the top of slopes to divert runoff away from disturbed slopes
- As check dams across mildly sloped construction roads

Limitations

- Gravel berms may be difficult to remove.
- Removal problems limit their usefulness in landscaped areas.
- Gravel bag berm may not be appropriate for drainage areas greater than 5 acres.
- Runoff will pond upstream of the filter, possibly causing flooding if sufficient space does not exist.
- Degraded gravel bags may rupture when removed, spilling contents.
- Installation can be labor intensive.
- Berms may have limited durability for long-term projects.
- When used to detain concentrated flows, maintenance requirements increase.

Implementation

General

A gravel bag berm consists of a row of open graded gravel–filled bags placed on a level contour. When appropriately placed, a gravel bag berm intercepts and slows sheet flow runoff, causing temporary ponding. The temporary ponding provides quiescent conditions allowing sediment to settle. The open graded gravel in the bags is porous, which allows the ponded runoff to flow slowly through the bags, releasing the runoff as sheet flows. Gravel bag berms also interrupt the slope length and thereby reduce erosion by reducing the tendency of sheet flows to concentrate into rivulets, which erode rills, and ultimately gullies, into disturbed, sloped soils. Gravel bag berms are similar to sand bag barriers, but are more porous.

Design and Layout

- Locate gravel bag berms on level contours.
  - Slopes between 20:1 and 2:1 (H:V): Gravel bags should be placed at a maximum interval of 50 ft (a closer spacing is more effective), with the first row near the slope toe.
  - Slopes 2:1 (H:V) or steeper: Gravel bags should be placed at a maximum interval of 25 ft (a closer spacing is more effective), with the first row placed the slope toe.
- Turn the ends of the gravel bag barriers up slope to prevent runoff from going around the berm.
- Allow sufficient space up slope from the gravel bag berm to allow ponding, and to provide room for sediment storage.

- For installation near the toe of the slope, consider moving the gravel bag barriers away from the slope toe to facilitate cleaning. To prevent flows behind the barrier, bags can be placed perpendicular to a berm to serve as cross barriers.
- Drainage area should not exceed 5 acres.
- In Non-Traffic Areas:
  - Height = 18 in. maximum
  - Top width = 24 in. minimum for three or more layer construction
  - Top width = 12 in. minimum for one or two layer construction
  - Side slopes = 2:1 or flatter
- In Construction Traffic Areas:
  - Height = 12 in. maximum
  - Top width = 24 in. minimum for three or more layer construction.
  - Top width = 12 in. minimum for one or two layer construction.
  - Side slopes = 2:1 or flatter.
- Butt ends of bags tightly
- On multiple row, or multiple layer construction, overlapp butt joints of adjacent row and row beneath.
- Use a pyramid approach when stacking bags.

Materials

- ***Bag Material:*** Bags should be woven polypropylene, polyethylene or polyamide fabric or burlap, minimum unit weight of 4 ounces/yd^2, Mullen burst strength exceeding 300 lb/in^2 in conformance with the requirements in ASTM designation D3786, and ultraviolet stability exceeding 70% in conformance with the requirements in ASTM designation D4355.
- ***Bag Size:*** Each gravel-filled bag should have a length of 18 in., width of 12 in., thickness of 3 in., and mass of approximately 33 lbs. Bag dimensions are nominal, and may vary based on locally available materials.
- ***Fill Material:*** Fill material should be 0.5 to 1 in. Class 2 aggregate base, clean and free from clay, organic matter, and other deleterious material, or other suitable open graded, non-cohesive, porous gravel.

Costs

Gravel filter: Expensive, since off-site materials, hand construction, and demolition/removal are usually required. Material costs for gravel bags are average of $2.50 per empty gravel bag. Gravel costs range from $20-$35 per yd^3.

Inspection and Maintenance

- Inspect BMPs prior to forecast rain, daily during extended rain events, after rain events, weekly during the rainy season, and at two-week intervals during the non-rainy season.
- Gravel bags exposed to sunlight will need to be replaced every two to three months due to degrading of the bags.
- Reshape or replace gravel bags as needed.
- Repair washouts or other damage as needed.
- Sediment that accumulates in the BMP must be periodically removed in order to maintain BMP effectiveness. Sediment should be removed when the sediment accumulation reaches one-third of the barrier height. Sediment removed during maintenance may be incorporated into earthwork on the site or disposed at an appropriate location.
- Remove gravel bag berms when no longer needed. Remove sediment accumulation and clean, re-grade, and stabilize the area. Removed sediment should be incorporated in the project or disposed of.

References

Handbook of Steel Drainage and Highway Construction, American Iron and Steel Institute, 1983.

Stormwater Quality Handbooks - Construction Site Best Management Practices (BMPs) Manual, State of California Department of Transportation (Caltrans), November 2000.

Stormwater Pollution Plan Handbook, First Edition, State of California, Department of Transportation Division of New Technology, Materials and Research, October 1992.

Street Sweeping and Vacuuming SE-7

Objectives

EC	Erosion Control	
SE	Sediment Control	☒
TR	Tracking Control	☑
WE	Wind Erosion Control	
NS	Non-Stormwater Management Control	
WM	Waste Management and Materials Pollution Control	

Legend:

☑ **Primary Objective**

☒ **Secondary Objective**

Targeted Constituents

Sediment	☑
Nutrients	
Trash	☑
Metals	
Bacteria	
Oil and Grease	☑
Organics	

Potential Alternatives

None

Description and Purpose

Street sweeping and vacuuming includes use of self-propelled and walk-behind equipment to remove sediment from streets and roadways, and to clean paved surfaces in preparation for final paving. Sweeping and vacuuming prevents sediment from the project site from entering storm drains or receiving waters.

Suitable Applications

Sweeping and vacuuming are suitable anywhere sediment is tracked from the project site onto public or private paved streets and roads, typically at points of egress. Sweeping and vacuuming are also applicable during preparation of paved surfaces for final paving.

Limitations

Sweeping and vacuuming may not be effective when sediment is wet or when tracked soil is caked (caked soil may need to be scraped loose).

Implementation

- Controlling the number of points where vehicles can leave the site will allow sweeping and vacuuming efforts to be focused, and perhaps save money.
- Inspect potential sediment tracking locations daily.
- Visible sediment tracking should be swept or vacuumed on a daily basis.

CASQA
CALIFORNIA STORMWATER QUALITY ASSOCIATION

- Do not use kick brooms or sweeper attachments. These tend to spread the dirt rather than remove it.
- If not mixed with debris or trash, consider incorporating the removed sediment back into the project

Costs

Rental rates for self-propelled sweepers vary depending on hopper size and duration of rental. Expect rental rates from $58/hour (3 yd^3 hopper) to $88/hour (9 yd^3 hopper), plus operator costs. Hourly production rates vary with the amount of area to be swept and amount of sediment. Match the hopper size to the area and expect sediment load to minimize time spent dumping.

Inspection and Maintenance

- Inspect BMPs prior to forecast rain, daily during extended rain events, after rain events, weekly during the rainy season, and at two-week intervals during the non-rainy season.
- When actively in use, points of ingress and egress must be inspected daily.
- When tracked or spilled sediment is observed outside the construction limits, it must be removed at least daily. More frequent removal, even continuous removal, may be required in some jurisdictions.
- Be careful not to sweep up any unknown substance or any object that may be potentially hazardous.
- Adjust brooms frequently; maximize efficiency of sweeping operations.
- After sweeping is finished, properly dispose of sweeper wastes at an approved dumpsite.

References

Stormwater Quality Handbooks - Construction Site Best Management Practices (BMPs) Manual, State of California Department of Transportation (Caltrans), November 2000.

Labor Surcharge and Equipment Rental Rates, State of California Department of Transportation (Caltrans), April 1, 2002 – March 31, 2003.

Sandbag Barrier SE-8

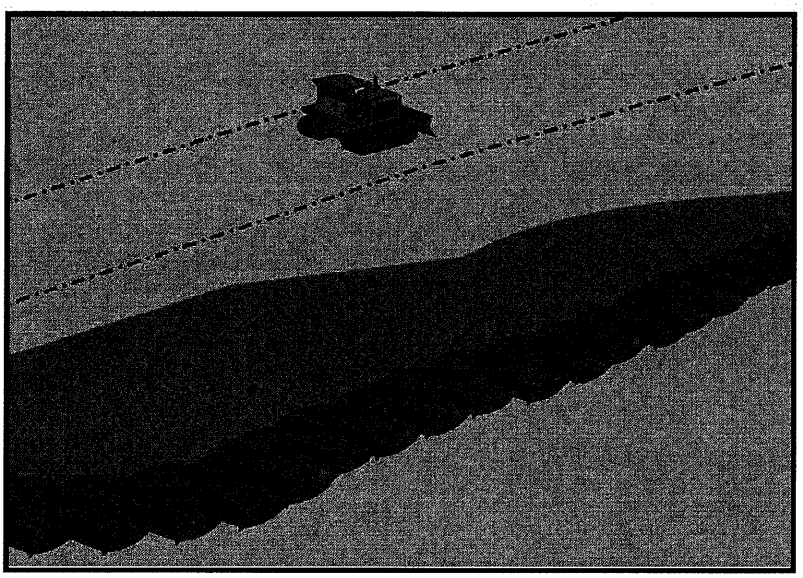

Objectives

EC	Erosion Control	☒
SE	Sediment Control	☑
TR	Tracking Control	
WE	Wind Erosion Control	
NS	Non-Stormwater Management Control	
WM	Waste Management and Materials Pollution Control	

Legend:

☑ **Primary Objective**

☒ **Secondary Objective**

Targeted Constituents

Sediment	☑
Nutrients	
Trash	
Metals	
Bacteria	
Oil and Grease	
Organics	

Potential Alternatives

SE-1 Silt Fence

SE-5 Fiber Rolls

SE-6 Gravel Bag Berm

SE-9 Straw Bale Barrier

Description and Purpose

A sandbag barrier is a series of sand-filled bags placed on a level contour to intercept sheet flows. Sandbag barriers pond sheet flow runoff, allowing sediment to settle out.

Suitable Applications

Sandbag barriers may be suitable:

- As a linear sediment control measure:
  - Below the toe of slopes and erodible slopes
  - As sediment traps at culvert/pipe outlets
  - Below other small cleared areas
  - Along the perimeter of a site
  - Down slope of exposed soil areas
  - Around temporary stockpiles and spoil areas
  - Parallel to a roadway to keep sediment off paved areas
  - Along streams and channels
- As linear erosion control measure:
  - Along the face and at grade breaks of exposed and erodible slopes to shorten slope length and spread runoff as sheet flow

CASQA
CALIFORNIA STORMWATER QUALITY ASSOCIATION

- At the top of slopes to divert runoff away from disturbed slopes
- As check dams across mildly sloped construction roads

Limitations

- It is necessary to limit the drainage area upstream of the barrier to 5 acres.
- Degraded sandbags may rupture when removed, spilling sand.
- Installation can be labor intensive.
- Barriers may have limited durability for long-term projects.
- When used to detain concentrated flows, maintenance requirements increase.
- Burlap should not be used for sandbags.

Implementation

General

A sandbag barrier consists of a row of sand-filled bags placed on a level contour. When appropriately placed, a sandbag barrier intercepts and slows sheet flow runoff, causing temporary ponding. The temporary ponding provides quiescent conditions allowing sediment to settle. While the sand-filled bags are porous, the fine sand tends to quickly plug with sediment, limiting the rate of flow through the barrier. If a porous barrier is desired, consider SE-1, Silt Fence, SE-5, Fiber Rolls, SE-6, Gravel Bag Berms, or SE-9, Straw Bale Barriers. Sandbag barriers also interrupt the slope length and thereby reduce erosion by reducing the tendency of sheet flows to concentrate into rivulets which erode rills, and ultimately gullies, into disturbed, sloped soils. Sandbag barriers are similar to ground bag berms, but less porous.

Design and Layout

- Locate sandbag barriers on a level contour.
  - Slopes between 20:1 and 2:1 (H:V): Sandbags should be placed at a maximum interval of 50 ft (a closer spacing is more effective), with the first row near the slope toe.
  - Slopes 2:1 (H:V) or steeper: Sandbags should be placed at a maximum interval of 25 ft (a closer spacing is more effective), with the first row placed near the slope toe.
- Turn the ends of the sandbag barrier up slope to prevent runoff from going around the barrier.
- Allow sufficient space up slope from the barrier to allow ponding, and to provide room for sediment storage.
- For installation near the toe of the slope, consider moving the barrier away from the slope toe to facilitate cleaning. To prevent flow behind the barrier, sandbags can be placed perpendicular to the barrier to serve as cross barriers.
- Drainage area should not exceed 5 acres.

- Stack sandbags at least three bags high.
- Butt ends of bags tightly.
- Overlapp butt joints of row beneath with each successive row.
- Use a pyramid approach when stacking bags.
- In non-traffic areas
  - Height = 18 in. maximum
  - Top width = 24 in. minimum for three or more layer construction
  - Side slope = 2:1 or flatter
- In construction traffic areas
  - Height = 12 in. maximum
  - Top width = 24 in. minimum for three or more layer construction.
  - Side slopes = 2:1 or flatter.

Materials

- ***Sandbag Material:*** Sandbag should be woven polypropylene, polyethylene or polyamide fabric, minimum unit weight of 4 ounces/yd^2, Mullen burst strength exceeding 300 lb/in^2 in conformance with the requirements in ASTM designation D3786, and ultraviolet stability exceeding 70% in conformance with the requirements in ASTM designation D4355. Use of burlap may not acceptable in some jurisdictions.
- ***Sandbag Size:*** Each sand-filled bag should have a length of 18 in., width of 12 in., thickness of 3 in., and mass of approximately 33 lbs. Bag dimensions are nominal, and may vary based on locally available materials.
- ***Fill Material:*** All sandbag fill material should be non-cohesive, Class 1 or Class 2 permeable material free from clay and deleterious material.

Costs

Sandbag barriers are more costly, but typically have a longer useful life than other barriers. Empty sandbags cost $0.25 - $0.75. Average cost of fill material is $8 per yd^3. Pre-filled sandbags are more expensive at $1.50 - $2.00 per bag.

Inspection and Maintenance

- Inspect BMPs prior to forecast rain, daily during extended rain events, after rain events, weekly during the rainy season, and at two-week intervals during the non-rainy season.
- Sandbags exposed to sunlight will need to be replaced every two to three months due to degradation of the bags.
- Reshape or replace sandbags as needed.

- Repair washouts or other damage as needed.
- Sediment that accumulates in the BMP must be periodically removed in order to maintain BMP effectiveness. Sediment should be removed when the sediment accumulation reaches one-third of the barrier height. Sediment removed during maintenance may be incorporated into earthwork on the site or disposed at an appropriate location.
- Remove sandbags when no longer needed. Remove sediment accumulation, and clean, re-grade, and stabilize the area.

References

Stormwater Quality Handbooks - Construction Site Best Management Practices (BMPs) Manual, State of California Department of Transportation (Caltrans), November 2000.

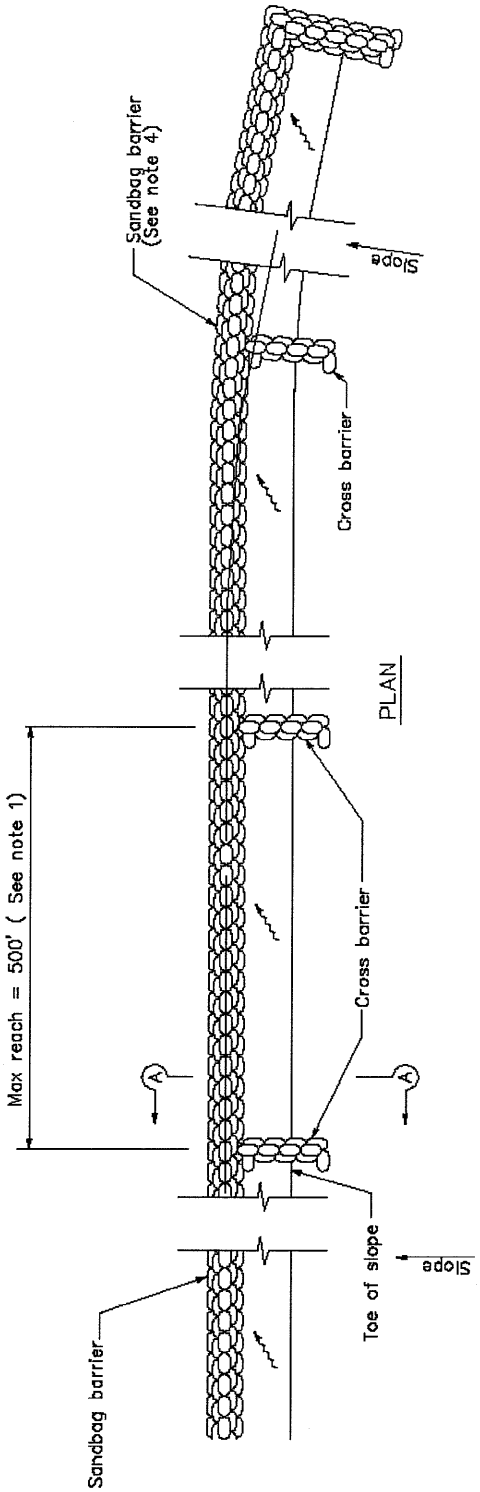

SANDBAG BARRIER

NOTES

1. Construct the length of each reach so that the change in base elevation along the reach does not exceed 1/2 the height of the linear barrier. In no case shall the reach length exceed 500'.
2. Place sandbags tightly.
3. Dimension may vary to fit field condition.
4. Sandbag barrier shall be a minimum of 3 bags high.
5. The end of the barrier shall be turned up slope.
6. Cross barriers shall be a min of 1/2 and a max of 2/3 the height of the linear barrier.
7. Sandbag rows and layers shall be staggered to eliminate gaps.

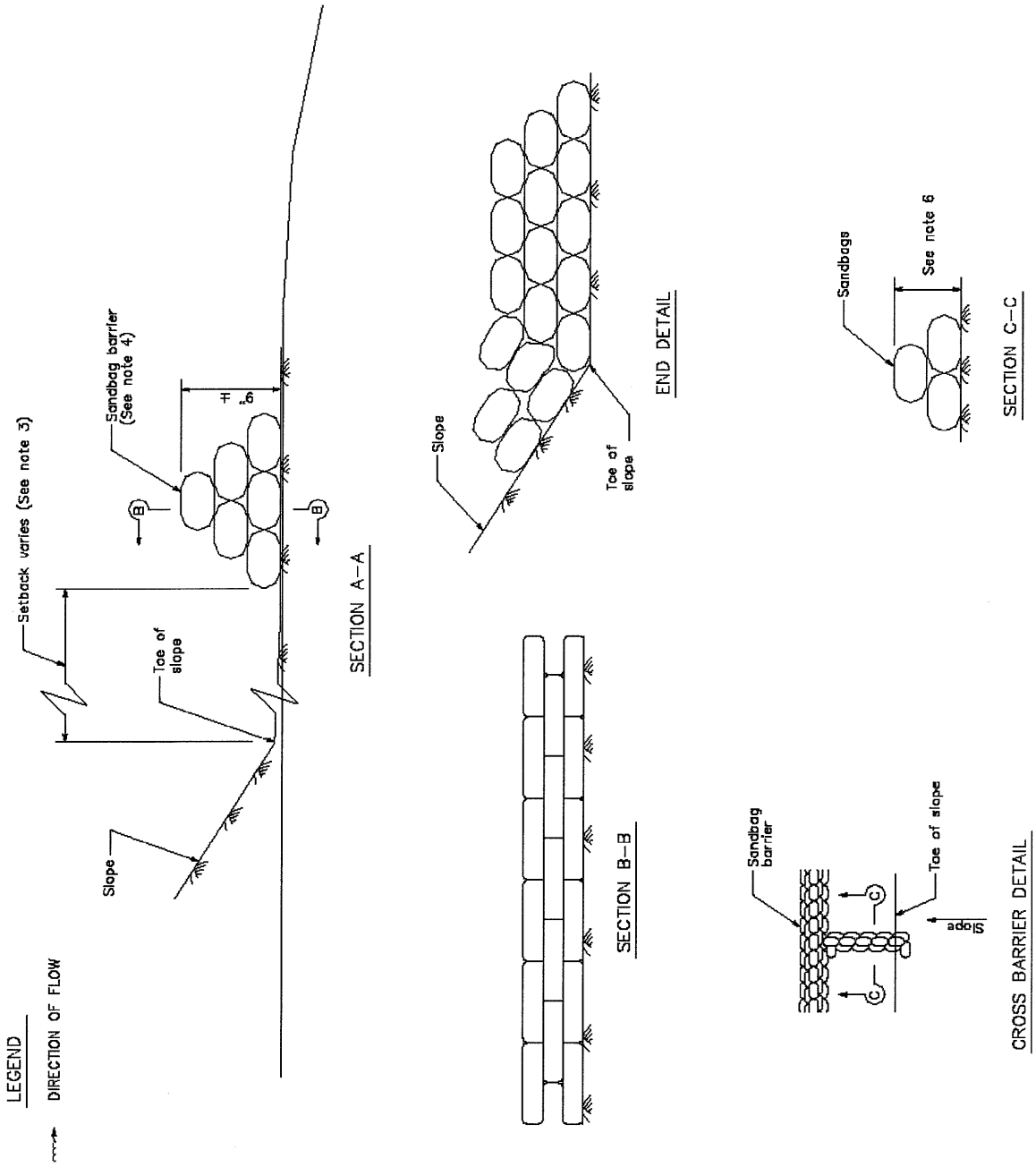
LEGEND
DIRECTION OF FLOW
Setback varies (See note 3)
Sandbag barrier (See note 4)
H
6"
B
B
Toe of slope
Slope
SECTION A-A
Slope
Toe of slope
END DETAIL
SECTION B-B
Sandbags
See note 6
SECTION C-C
Sandbag barrier
C
C
Toe of slope
Slope
CROSS BARRIER DETAIL

Straw Bale Barrier SE-9

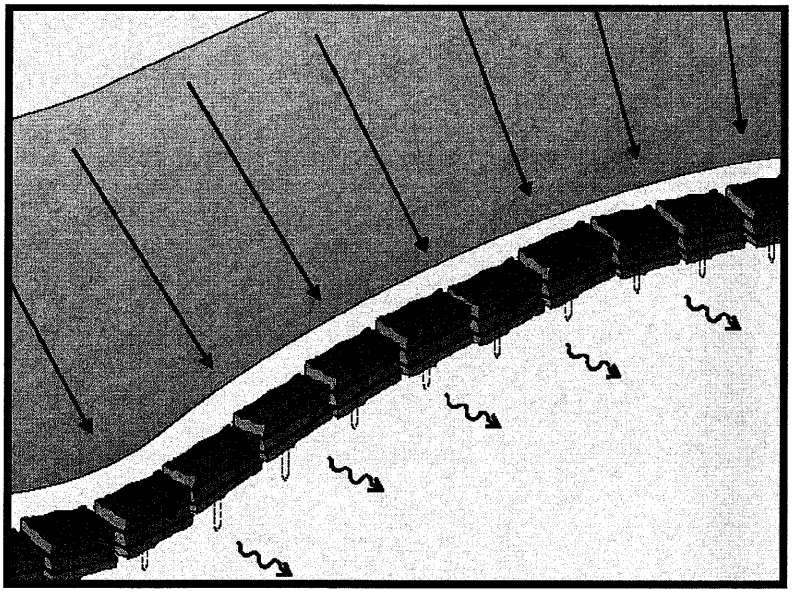

Objectives

EC	Erosion Control	☒
SE	Sediment Control	☑
TR	Tracking Control	
WE	Wind Erosion Control	
NS	Non-Stormwater Management Control	
WM	Waste Management and Materials Pollution Control	

Legend:

☑ **Primary Objective**

☒ **Secondary Objective**

Targeted Constituents

Sediment	☑
Nutrients	
Trash	
Metals	
Bacteria	
Oil and Grease	
Organics	

Potential Alternatives

SE-1 Silt Fence

SE-5 Fiber Rolls

SE-6 Gravel Bag Berm

SE-8 Sandbag Barrier

Description and Purpose

A straw bale barrier is a series of straw bales placed on a level contour to intercept sheet flows. Straw bale barriers pond sheet- flow runoff, allowing sediment to settle out.

Suitable Applications

Straw bale barriers may be suitable:

- As a linear sediment control measure:
  - Below the toe of slopes and erodible slopes
  - As sediment traps at culvert/pipe outlets
  - Below other small cleared areas
  - Along the perimeter of a site
  - Down slope of exposed soil areas
  - Around temporary stockpiles and spoil areas
  - Parallel to a roadway to keep sediment off paved areas
  - Along streams and channels
- As linear erosion control measure:
  - Along the face and at grade breaks of exposed and erodible slopes to shorten slope length and spread runoff as sheet flow

CASQA
CALIFORNIA STORMWATER QUALITY ASSOCIATION

- At the top of slopes to divert runoff away from disturbed slopes
- As check dams across mildly sloped construction roads

Limitations

Straw bale barriers:

- Are not to be used for extended periods of time because they tend to rot and fall apart
- Are suitable only for sheet flow on slopes of 10 % or flatter
- Are not appropriate for large drainage areas, limit to one acre or less
- May require constant maintenance due to rotting
- Are not recommended for concentrated flow, inlet protection, channel flow, and live streams
- Cannot be made of bale bindings of jute or cotton
- Require labor-intensive installation and maintenance
- Cannot be used on paved surfaces
- Should not to be used for drain inlet protection
- Should not be used on lined ditches
- May introduce undesirable non-native plants to the area

Implementation

General

A straw bale barrier consists of a row of straw bales placed on a level contour. When appropriately placed, a straw bale barrier intercepts and slows sheet flow runoff, causing temporary ponding. The temporary ponding provides quiescent conditions allowing sediment to settle. Straw bale barriers also interrupt the slope length and thereby reduce erosion by reducing the tendency of sheet flows to concentrate into rivulets, which erode rills, and ultimately gullies, into disturbed, sloped soils.

Straw bale barriers have not been as effective as expected due to improper use. These barriers have been placed in streams and drainage ways where runoff volumes and velocities have caused the barriers to wash out. In addition, failure to stake and entrench the straw bale has allowed undercutting and end flow. Use of straw bale barriers in accordance with this BMP should produce acceptable results.

Design and Layout

- Locate straw bale barriers on a level contour.
  - Slopes up to 10:1 (H:V): Straw bales should be placed at a maximum interval of 50 ft (a closer spacing is more effective), with the first row near the toe of slope.
  - Slopes greater than 10:1 (H:V): Not recommended.

- Turn the ends of the straw bale barrier up slope to prevent runoff from going around the barrier.
- Allow sufficient space up slope from the barrier to allow ponding, and to provide room for sediment storage.
- For installation near the toe of the slope, consider moving the barrier away from the slope toe to facilitate cleaning. To prevent flow behind the barrier, sand bags can be placed perpendicular to the barrier to serve as cross barriers.
- Drainage area should not exceed 1 acre, or 0.25 acre per 100 ft of barrier.
- Maximum flow path to the barrier should be limited to 100 ft.
- Straw bale barriers should consist of two parallel rows.
  - Butt ends of bales tightly
  - Stagger butt joints between front and back row
  - Each row of bales must be trenched in and firmly staked
- Straw bale barriers are limited in height to one bale laid on its side.
- Anchor bales with either two wood stakes or four bars driven through the bale and into the soil. Drive the first stake towards the butt joint with the adjacent bale to force the bales together.
- See attached figure for installation details.

Materials

- ***Straw Bale Size:*** Each straw bale should be a minimum of 14 in. wide, 18 in. in height, 36 in. in length and should have a minimum mass of 50 lbs. The straw bale should be composed entirely of vegetative matter, except for the binding material.
- ***Bale Bindings:*** Bales should be bound by steel wire, nylon or polypropylene string placed horizontally. Jute and cotton binding should not be used. Baling wire should be a minimum diameter of 14 gauge. Nylon or polypropylene string should be approximately 12 gauge in diameter with a breaking strength of 80 lbs force.
- ***Stakes:*** Wood stakes should be commercial quality lumber of the size and shape shown on the plans. Each stake should be free from decay, splits or cracks longer than the thickness of the stake, or other defects that would weaken the stakes and cause the stakes to be structurally unsuitable. Steel bar reinforcement should be equal to a #4 designation or greater. End protection should be provided for any exposed bar reinforcement.

Costs

Straw bales cost $5 - $7 each. Adequate labor should be budgeted for installation and maintenance.

Inspection and Maintenance

Maintenance

- Inspect BMPs prior to forecast rain, daily during extended rain events, after rain events, weekly during the rainy season, and at two-week intervals during the non-rainy season.
- Straw bales degrade, especially when exposed to moisture. Rotting bales will need to be replaced on a regular basis.
- Replace or repair damaged bales as needed.
- Repair washouts or other damages as needed.
- Sediment that accumulates in the BMP must be periodically removed in order to maintain BMP effectiveness. Sediment should be removed when the sediment accumulation reaches one-third of the barrier height. Sediment removed during maintenance may be incorporated into earthwork on the site or disposed at an appropriate location.
- Remove straw bales when no longer needed. Remove sediment accumulation, and clean, re-grade, and stabilize the area. Removed sediment should be incorporated in the project or disposed of.

References

Stormwater Quality Handbooks - Construction Site Best Management Practices (BMPs) Manual, State of California Department of Transportation (Caltrans), November 2000.

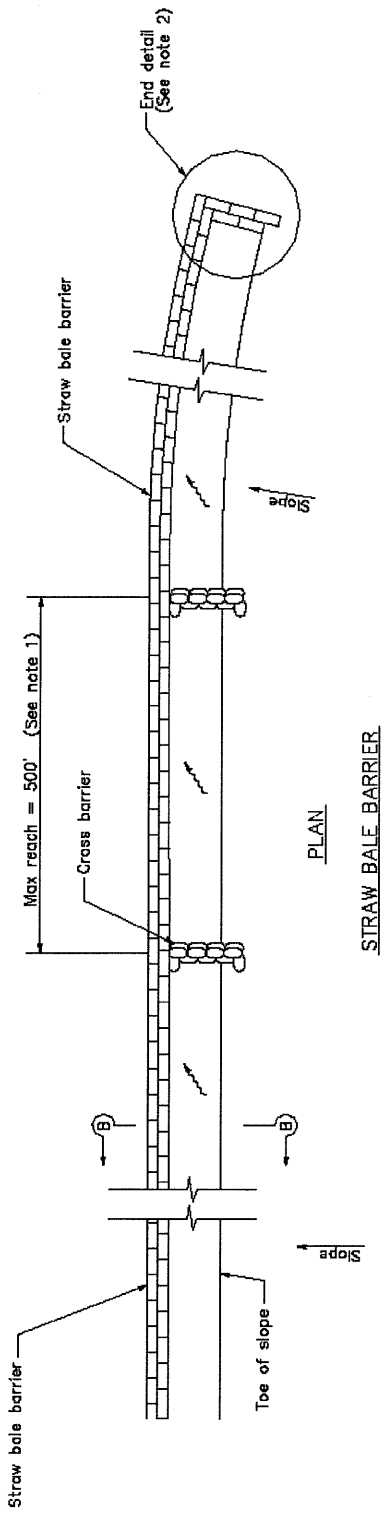

PLAN

STRAW BALE BARRIER

LEGEND

DIRECTION OF FLOW

NOTES

1. Construct the length of each reach so that the change in base elevation along the reach does not exceed 1/2 the height of the linear barrier. In no case shall the reach length exceed 500'.
2. The end of barrier shall be turned up slope.
3. Dimension may vary to fit field condition.
4. Stake dimensions are nominal.
5. Place straw bales tightly together.
6. Tamp embedment spoils against sides of installed bales.
7. Drive angled wood stake before vertical stake to ensure tight abutment to adjacent bale.
8. Sandbag cross barriers should be a min of 1/2 and a max of 2/3 the height of the linear barrier.
9. Sandbag rows and layers should be offset to eliminate gaps.

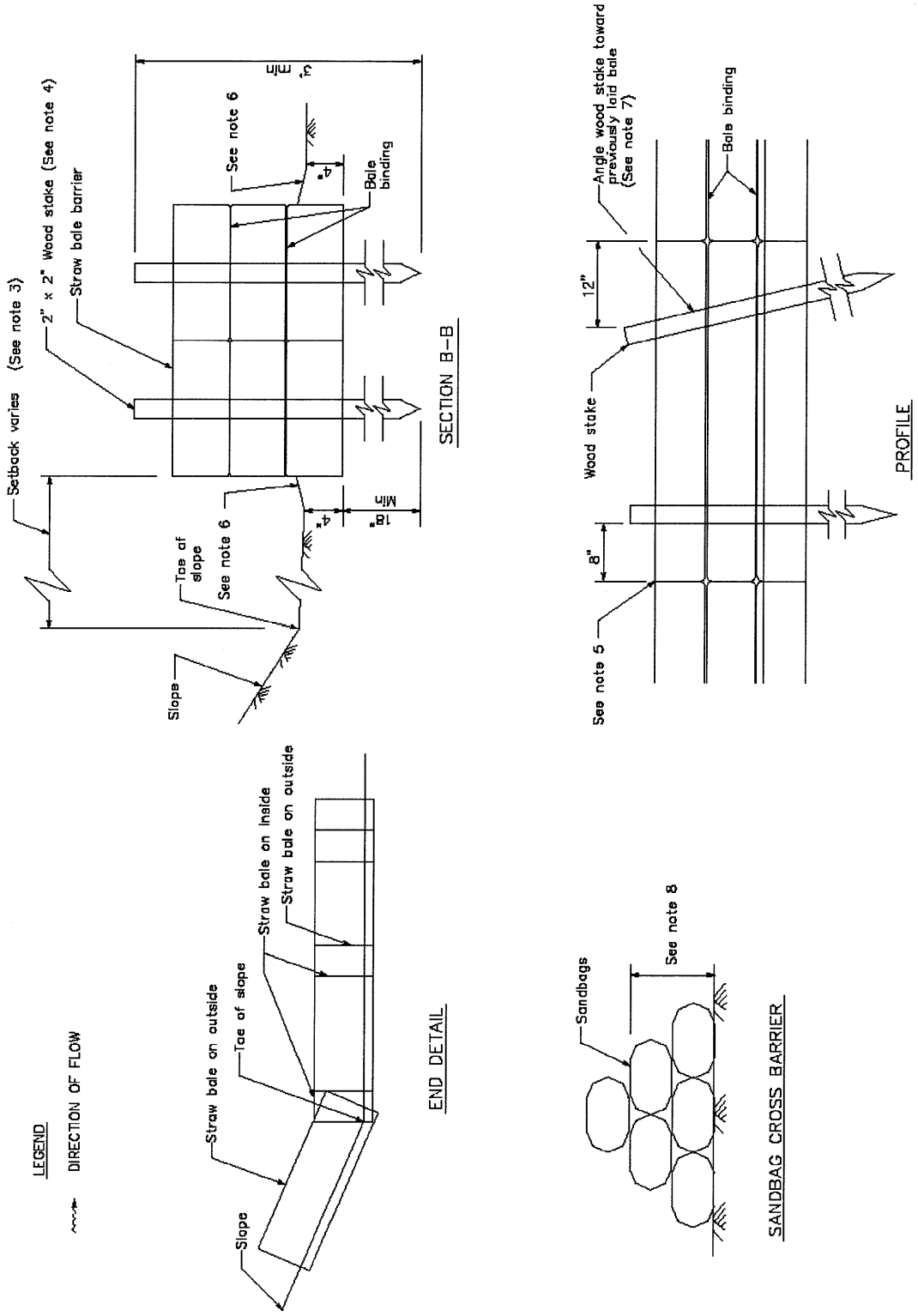
Setback varies (See note 3)
2" x 2" Wood stake (See note 4)
Straw bale barrier
See note 6
4"
Bale binding
4' min
Slope
Toe of slope
See note 6
4"
18" Min
SECTION B-B
Angle wood stake toward previously laid bale (See note 7)
Bale binding
12"
Wood stake
8"
See note 5
PROFILE
LEGEND
DIRECTION OF FLOW
Straw bale on outside
Toe of slope
Straw bale on inside
Straw bale on outside
Slope
END DETAIL
Sandbags
See note 8
SANDBAG CROSS BARRIER

Storm Drain Inlet Protection SE-10

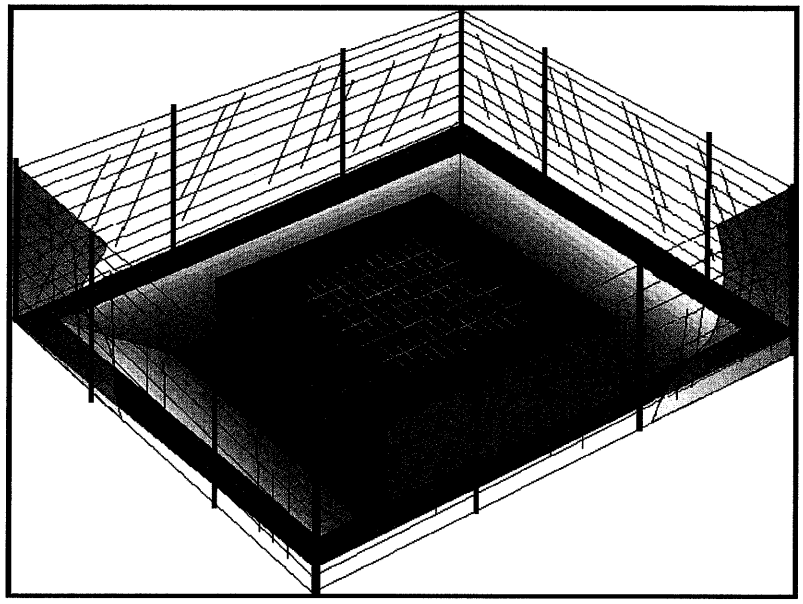

Objectives

EC	Erosion Control	
SE	Sediment Control	☑
TR	Tracking Control	
WE	Wind Erosion Control	
NS	Non-Stormwater Management Control	
WM	Waste Management and Materials Pollution Control	

Legend:

☑ **Primary Objective**

☒ **Secondary Objective**

Targeted Constituents

Sediment	☑
Nutrients	
Trash	☑
Metals	
Bacteria	
Oil and Grease	
Organics	

Potential Alternatives

SE-1 Silt Fence

SE-5 Fiber Rolls

SE-6 Gravel Bag Berm

SE-8 Sandbag Barrier

SE-9 Straw Bale Barrier

Description and Purpose

Storm drain inlet protection consists of a sediment filter or an impounding area around or upstream of a storm drain, drop inlet, or curb inlet. Storm drain inlet protection measures temporarily pond runoff before it enters the storm drain, allowing sediment to settle. Some filter configurations also remove sediment by filtering, but usually the ponding action results in the greatest sediment reduction.

Suitable Applications

Every storm drain inlet receiving sediment-laden runoff should be protected.

Limitations

- Drainage area should not exceed 1 acre.
- Straw bales, while potentially effective, have not produced in practice satisfactory results, primarily due to improper installation.
- Requires an adequate area for water to pond without encroaching into portions of the roadway subject to traffic.
- Inlet protection usually requires other methods of temporary protection to prevent sediment-laden stormwater and non-stormwater discharges from entering the storm drain system.
- Sediment removal may be difficult in high flow conditions or if runoff is heavily sediment laden. If high flow conditions are

CASQA
CALIFORNIA STORMWATER QUALITY ASSOCIATION

expected, use other onsite sediment trapping techniques in conjunction with inlet protection.

- Frequent maintenance is required.
- For drainage areas larger than 1 acre, runoff should be routed to a sediment-trapping device designed for larger flows. See BMPs SE-2, Sediment Basin, and SE-3, Sediment Traps.
- Excavated drop inlet sediment traps are appropriate where relatively heavy flows are expected, and overflow capability is needed.

Implementation

General

Large amounts of sediment may enter the storm drain system when storm drains are installed before the upslope drainage area is stabilized, or where construction is adjacent to an existing storm drain. In cases of extreme sediment loading, the storm drain itself may clog and lose a major portion of its capacity. To avoid these problems, it is necessary to prevent sediment from entering the system at the inlets.

Inlet control measures presented in this handbook should not be used for inlets draining more than one acre. Runoff from larger disturbed areas should be first routed through SE-2, Sediment Basin or SE-3, Sediment Trap. Different types of inlet protection are appropriate for different applications depending on site conditions and the type of inlet. Inlet protection methods not presented in this handbook should be approved by the local stormwater management agency.

Design and Layout

Identify existing and planned storm drain inlets that have the potential to receive sediment-laden surface runoff. Determine if storm drain inlet protection is needed and which method to use.

- Limit upstream drainage area to 1 acre maximum. For larger drainage areas, use SE-2, Sediment Basin, or SE-3, Sediment Trap, upstream of the inlet protection device.
- The key to successful and safe use of storm drain inlet protection devices is to know where runoff will pond or be diverted.
  - Determine the acceptable location and extent of ponding in the vicinity of the drain inlet. The acceptable location and extent of ponding will influence the type and design of the storm drain inlet protection device.
  - Determine the extent of potential runoff diversion caused by the storm drain inlet protection device. Runoff ponded by inlet protection devices may flow around the device and towards the next downstream inlet. In some cases, this is acceptable; in other cases, serious erosion or downstream property damage can be caused by these diversions. The possibility of runoff diversions will influence whether or not storm drain inlet protection is suitable; and, if suitable, the type and design of the device.
- The location and extent of ponding, and the extent of diversion, can usually be controlled through appropriate placement of the inlet protection device. In some cases, moving the

inlet protection device a short distance upstream of the actual inlet can provide more efficient sediment control, limit ponding to desired areas, and prevent or control diversions.

- Four types of inlet protection are presented below. However, it is recognized that other effective methods and proprietary devices exist and may be selected.
  - Filter Fabric Fence: Appropriate for drainage basins with less than a 5% slope, sheet flows, and flows under 0.5 cfs.
  - Excavated Drop Inlet Sediment Trap: An excavated area around the inlet to trap sediment (SE-3).
  - Gravel bag barrier: Used to create a small sediment trap upstream of inlets on sloped, paved streets. Appropriate for sheet flow or when concentrated flow may exceed 0.5 cfs, and where overtopping is required to prevent flooding.
  - Block and Gravel Filter: Appropriate for flows greater than 0.5 cfs.
- Select the appropriate type of inlet protection and design as referred to or as described in this fact sheet.
- Provide area around the inlet for water to pond without flooding structures and property.
- Grates and spaces around all inlets should be sealed to prevent seepage of sediment-laden water.
- Excavate sediment sumps (where needed) 1 to 2 ft with 2:1 side slopes around the inlet.

Installation

- ***DI Protection Type 1 - Filter Fabric Fence*** - The filter fabric fence (Type 1) protection is shown in the attached figure. Similar to constructing a silt fence; see BMP SE-1, Silt Fence. Do not place filter fabric underneath the inlet grate since the collected sediment may fall into the drain inlet when the fabric is removed or replaced.
  1. Excavate a trench approximately 6 in. wide and 6 in. deep along the line of the silt fence inlet protection device.
  2. Place 2 in. by 2 in. wooden stakes around the perimeter of the inlet a maximum of 3 ft apart and drive them at least 18 in. into the ground or 12 in. below the bottom of the trench. The stakes must be at least 48 in.
  3. Lay fabric along bottom of trench, up side of trench, and then up stakes. See SE-1, Silt Fence, for details. The maximum silt fence height around the inlet is 24 in.
  4. Staple the filter fabric (for materials and specifications, see SE-1, Silt Fence) to wooden stakes. Use heavy-duty wire staples at least 1 in. in length.
  5. Backfill the trench with gravel or compacted earth all the way around.
- ***DI Protection Type 2 - Excavated Drop Inlet Sediment Trap*** - The excavated drop inlet sediment trap (Type 2) is shown in the attached figures. Install filter fabric fence in

accordance with DI Protection Type 1. Size excavated trap to provide a minimum storage capacity calculated at the rate 67 yd^3/acre of drainage area.

- ***DI Protection Type 3 - Gravel bag*** - The gravel bag barrier (Type 3) is shown in the figures. Flow from a severe storm should not overtop the curb. In areas of high clay and silts, use filter fabric and gravel as additional filter media. Construct gravel bags in accordance with SE-6, Gravel Bag Berm. Gravel bags should be used due to their high permeability.

  1. Use sand bag made of geotextile fabric (not burlap) and fill with 0.75 in. rock or 0.25 in. pea gravel.
  2. Construct on gently sloping street.
  3. Leave room upstream of barrier for water to pond and sediment to settle.
  4. Place several layers of sand bags – overlapping the bags and packing them tightly together.
  5. Leave gap of one bag on the top row to serve as a spillway. Flow from a severe storm (e.g., 10 year storm) should not overtop the curb.

- ***DI Protection Type 4 – Block and Gravel Filter*** - The block and gravel filter (Type 4) is shown in the figures. Block and gravel filters are suitable for curb inlets commonly used in residential, commercial, and industrial construction.

  1. Place hardware cloth or comparable wire mesh with 0.5 in. openings over the drop inlet so that the wire extends a minimum of 1 ft beyond each side of the inlet structure. If more than one strip is necessary, overlap the strips. Place filter fabric over the wire mesh.
  2. Place concrete blocks lengthwise on their sides in a single row around the perimeter of the inlet, so that the open ends face outward, not upward. The ends of adjacent blocks should abut. The height of the barrier can be varied, depending on design needs, by stacking combinations of blocks that are 4 in., 8 in., and 12 in. wide. The row of blocks should be at least 12 in. but no greater than 24 in. high.
  3. Place wire mesh over the outside vertical face (open end) of the concrete blocks to prevent stone from being washed through the blocks. Use hardware cloth or comparable wire mesh with 0.5 in. opening.
  4. Pile washed stone against the wire mesh to the top of the blocks. Use 0.75 to 3 in.

Costs

- Average annual cost for installation and maintenance (one year useful life) is $200 per inlet.

Inspection and Maintenance

- Inspect BMPs prior to forecast rain, daily during extended rain events, after rain events, weekly during the rainy season, and at two-week intervals during the non-rainy season.

- Filter Fabric Fences. If the fabric becomes clogged, torn, or degrades, it should be replaced. Make sure the stakes are securely driven in the ground and are in good shape (i.e., not bent, cracked, or splintered, and are reasonably perpendicular to the ground). Replace damaged stakes.

- Gravel Filters. If the gravel becomes clogged with sediment, it must be carefully removed from the inlet and either cleaned or replaced. Since cleaning gravel at a construction site may be difficult, consider using the sediment-laden stone as fill material and put fresh stone around the inlet. Inspect bags for holes, gashes, and snags, and replace bags as needed. Check gravel bags for proper arrangement and displacement.

- Sediment that accumulates in the BMP must be periodically removed in order to maintain BMP effectiveness. Sediment should be removed when the sediment accumulation reaches one-third of the barrier height. Sediment removed during maintenance may be incorporated into earthwork on the site ore disposed at an appropriate location.

- Remove storm drain inlet protection once the drainage area is stabilized.

  - Clean and regrade area around the inlet and clean the inside of the storm drain inlet as it must be free of sediment and debris at the time of final inspection.

References

Stormwater Quality Handbooks - Construction Site Best Management Practices (BMPs) Manual, State of California Department of Transportation (Caltrans), November 2000.

Stormwater Management Manual for The Puget Sound Basin, Washington State Department of Ecology, Public Review Draft, 1991.

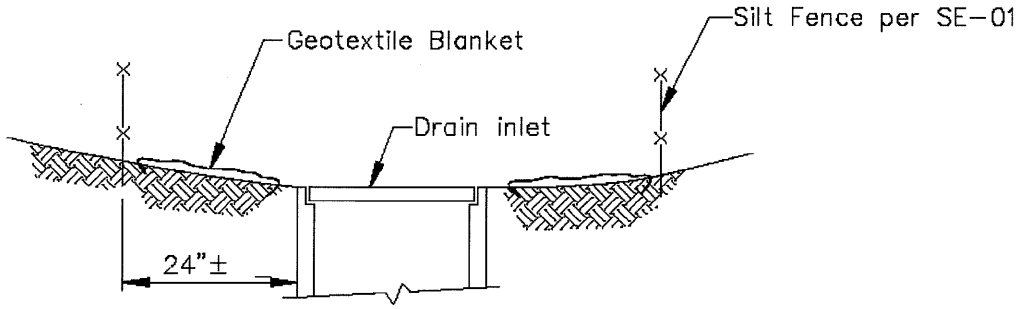

SECTION A–A

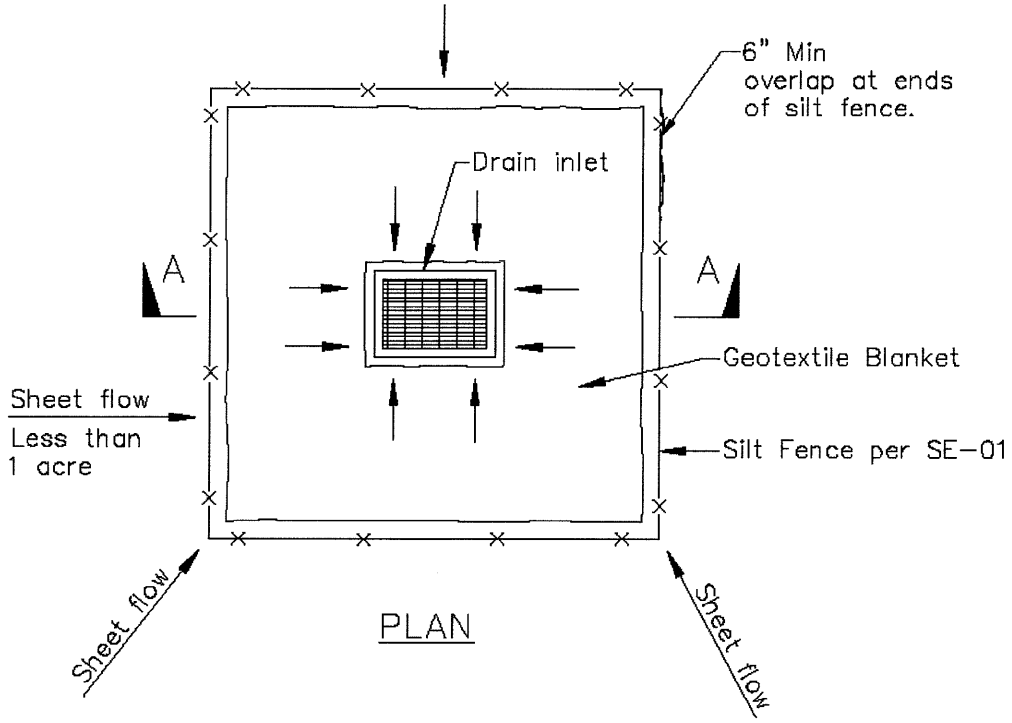

PLAN

DI PROTECTION TYPE 1
NOT TO SCALE

NOTES:

1. For use in areas where grading has been completed and final soil stabilization and seeding are pending.
2. Not applicable in paved areas.
3. Not applicable with concentrated flows.

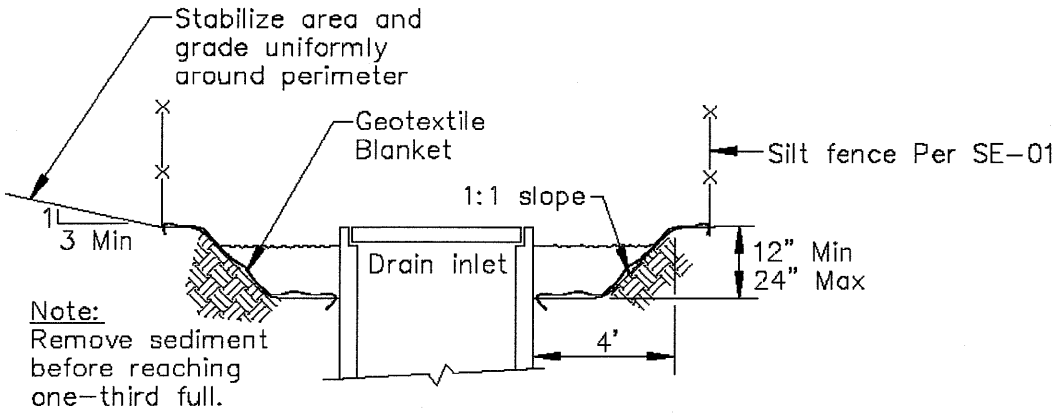

Section A–A

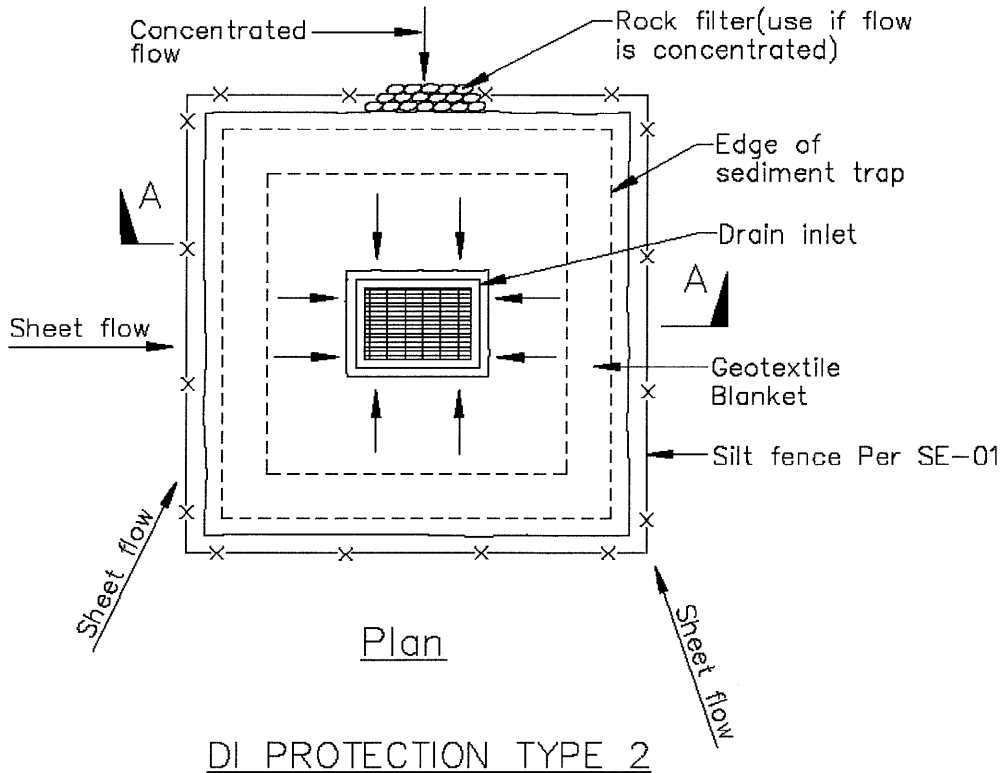

Plan

DI PROTECTION TYPE 2
NOT TO SCALE

Notes
1. For use in cleared and grubbed and in graded areas.
2. Shape basin so that longest inflow area faces longest length of trap.
3. For concentrated flows, shape basin in 2:1 ratio with length oriented towards direction of flow.

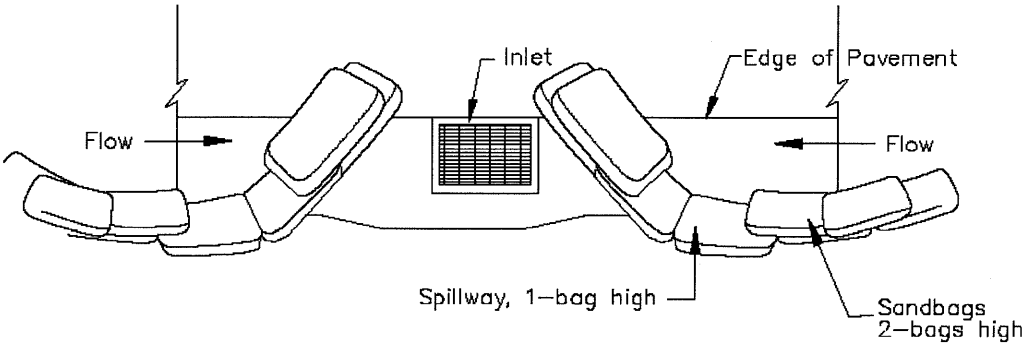

TYPICAL PROTECTION FOR INLET ON SUMP

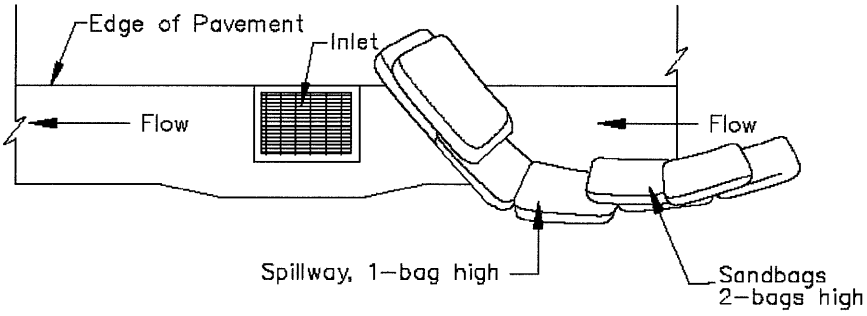

TYPICAL PROTECTION FOR INLET ON GRADE

NOTES:

1. Intended for short-term use.
2. Use to inhibit non-storm water flow.
3. Allow for proper maintenance and cleanup.
4. Bags must be removed after adjacent operation is completed
5. Not applicable in areas with high silts and clays without filter fabric.

DI PROTECTION TYPE 3
NOT TO SCALE

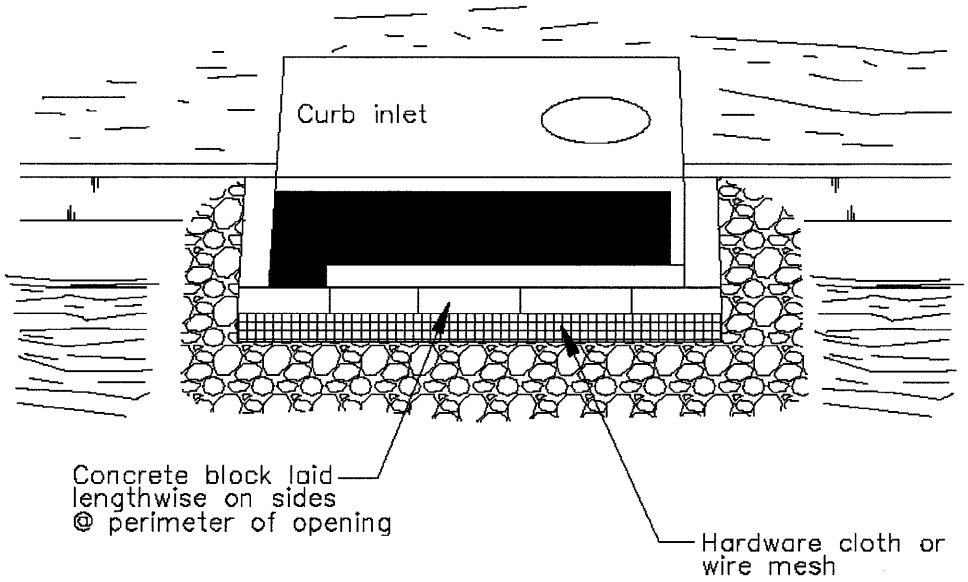

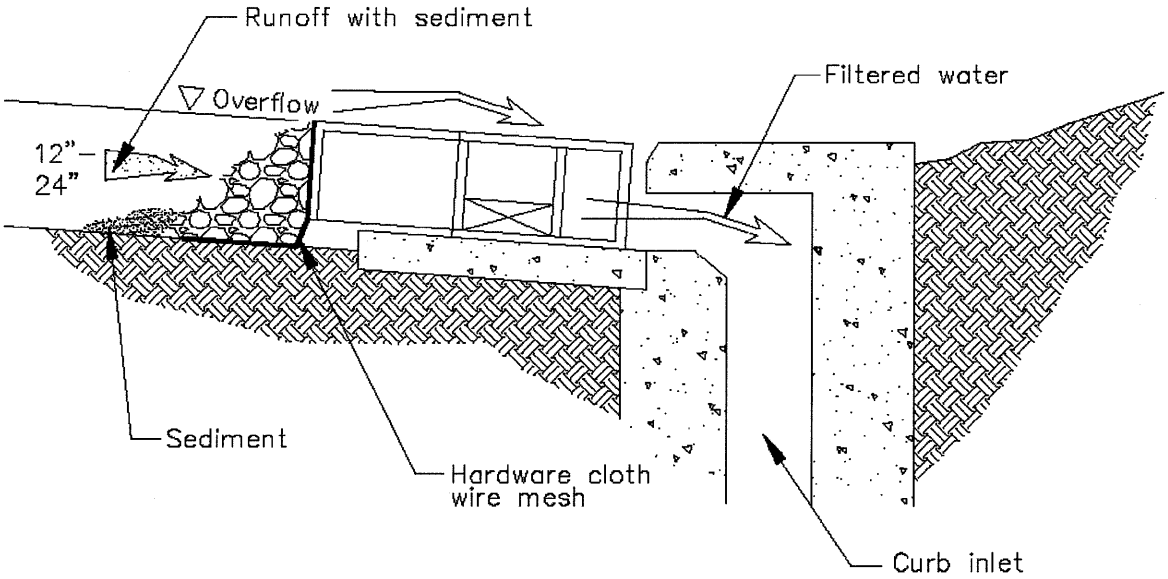

DI PROTECTION – TYPE 4

NOT TO SCALE

Stabilized Construction Entrance/Exit TC-1

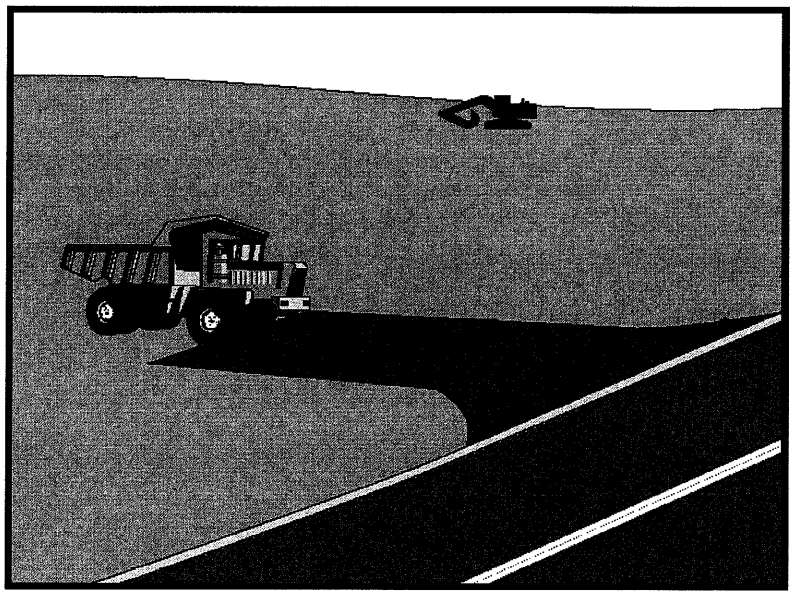

Objectives

EC	Erosion Control	☒
SE	Sediment Control	☒
TC	Tracking Control	☑
WE	Wind Erosion Control	
NS	Non-Stormwater Management Control	
WM	Waste Management and Materials Pollution Control	

Legend:

☑ **Primary Objective**

☒ **Secondary Objective**

Targeted Constituents

Sediment	☑
Nutrients	
Trash	
Metals	
Bacteria	
Oil and Grease	
Organics	

Potential Alternatives

None

Description and Purpose

A stabilized construction access is defined by a point of entrance/exit to a construction site that is stabilized to reduce the tracking of mud and dirt onto public roads by construction vehicles.

Suitable Applications

Use at construction sites:

- Where dirt or mud can be tracked onto public roads.
- Adjacent to water bodies.
- Where poor soils are encountered.
- Where dust is a problem during dry weather conditions.

Limitations

- Entrances and exits require periodic top dressing with additional stones.
- This BMP should be used in conjunction with street sweeping on adjacent public right of way.
- Entrances and exits should be constructed on level ground only.
- Stabilized construction entrances are rather expensive to construct and when a wash rack is included, a sediment trap of some kind must also be provided to collect wash water runoff.

CASQA
CALIFORNIA STORMWATER QUALITY ASSOCIATION

Stabilized Construction Entrance/Exit TC-1

Implementation

General

A stabilized construction entrance is a pad of aggregate underlain with filter cloth located at any point where traffic will be entering or leaving a construction site to or from a public right of way, street, alley, sidewalk, or parking area. The purpose of a stabilized construction entrance is to reduce or eliminate the tracking of sediment onto public rights of way or streets. Reducing tracking of sediments and other pollutants onto paved roads helps prevent deposition of sediments into local storm drains and production of airborne dust.

Where traffic will be entering or leaving the construction site, a stabilized construction entrance should be used. NPDES permits require that appropriate measures be implemented to prevent tracking of sediments onto paved roadways, where a significant source of sediments is derived from mud and dirt carried out from unpaved roads and construction sites.

Stabilized construction entrances are moderately effective in removing sediment from equipment leaving a construction site. The entrance should be built on level ground. Advantages of the Stabilized Construction Entrance/Exit is that it does remove some sediment from equipment and serves to channel construction traffic in and out of the site at specified locations. Efficiency is greatly increased when a washing rack is included as part of a stabilized construction entrance/exit.

Design and Layout

- Construct on level ground where possible.
- Select 3 to 6 in. diameter stones.
- Use minimum depth of stones of 12 in. or as recommended by soils engineer.
- Construct length of 50 ft minimum, and 30 ft minimum width.
- Rumble racks constructed of steel panels with ridges and installed in the stabilized entrance/exit will help remove additional sediment and to keep adjacent streets clean.
- Provide ample turning radii as part of the entrance.
- Limit the points of entrance/exit to the construction site.
- Limit speed of vehicles to control dust.
- Properly grade each construction entrance/exit to prevent runoff from leaving the construction site.
- Route runoff from stabilized entrances/exits through a sediment trapping device before discharge.
- Design stabilized entrance/exit to support heaviest vehicles and equipment that will use it.
- Select construction access stabilization (aggregate, asphaltic concrete, concrete) based on longevity, required performance, and site conditions. Do not use asphalt concrete (AC) grindings for stabilized construction access/roadway.

- If aggregate is selected, place crushed aggregate over geotextile fabric to at least 12 in. depth, or place aggregate to a depth recommended by a geotechnical engineer. A crushed aggregate greater than 3 in. but smaller than 6 in. should be used.
- Designate combination or single purpose entrances and exits to the construction site.
- Require that all employees, subcontractors, and suppliers utilize the stabilized construction access.
- Implement SE-7, Street Sweeping and Vacuuming, as needed.
- All exit locations intended to be used for more than a two-week period should have stabilized construction entrance/exit BMPs.

Inspection and Maintenance

- Inspect and verify that activity–based BMPs are in place prior to the commencement of associated activities. While activities associated with the BMPs are under way, inspect weekly during the rainy season and of two-week intervals in the non-rainy season to verify continued BMP implementation.
- Inspect local roads adjacent to the site daily. Sweep or vacuum to remove visible accumulated sediment.
- Remove aggregate, separate and dispose of sediment if construction entrance/exit is clogged with sediment.
- Keep all temporary roadway ditches clear.
- Check for damage and repair as needed.
- Replace gravel material when surface voids are visible.
- Remove all sediment deposited on paved roadways within 24 hours.
- Remove gravel and filter fabric at completion of construction

Costs

Average annual cost for installation and maintenance may vary from $1,200 to $4,800 each, averaging $2,400 per entrance. Costs will increase with addition of washing rack, and sediment trap. With wash rack, costs range from $1,200 - $6,000 each, averaging $3,600 per entrance.

References

Manual of Standards of Erosion and Sediment Control Measures, Association of Bay Area Governments, May 1995.

National Management Measures to Control Nonpoint Source Pollution from Urban Areas, USEPA Agency, 2002.

Proposed Guidance Specifying Management Measures for Sources of Nonpoint Pollution in Coastal Waters, Work Group Working Paper, USEPA, April 1992.

Stormwater Quality Handbooks Construction Site Best Management Practices (BMPs) Manual, State of California Department of Transportation (Caltrans), November 2000.

Stormwater Management of the Puget Sound Basin, Technical Manual, Publication #91-75, Washington State Department of Ecology, February 1992.

Virginia Erosion and Sedimentation Control Handbook, Virginia Department of Conservation and Recreation, Division of Soil and Water Conservation, 1991.

Guidance Specifying Management Measures for Nonpoint Pollution in Coastal Waters, EPA 840-B-9-002, USEPA, Office of Water, Washington, DC, 1993.

Water Quality Management Plan for the Lake Tahoe Region, Volume II, Handbook of Management Practices, Tahoe Regional Planning Agency, November 1988.

Stabilized Construction Entrance/Exit TC-1

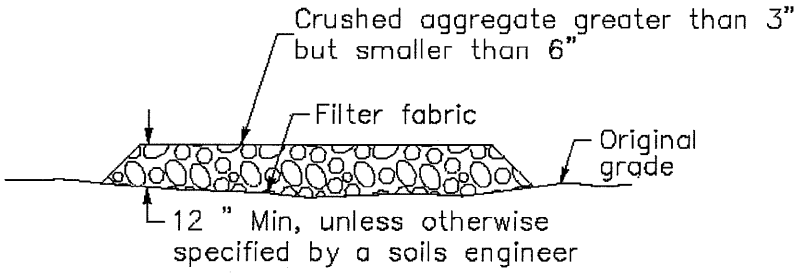

SECTION B–B
NTS

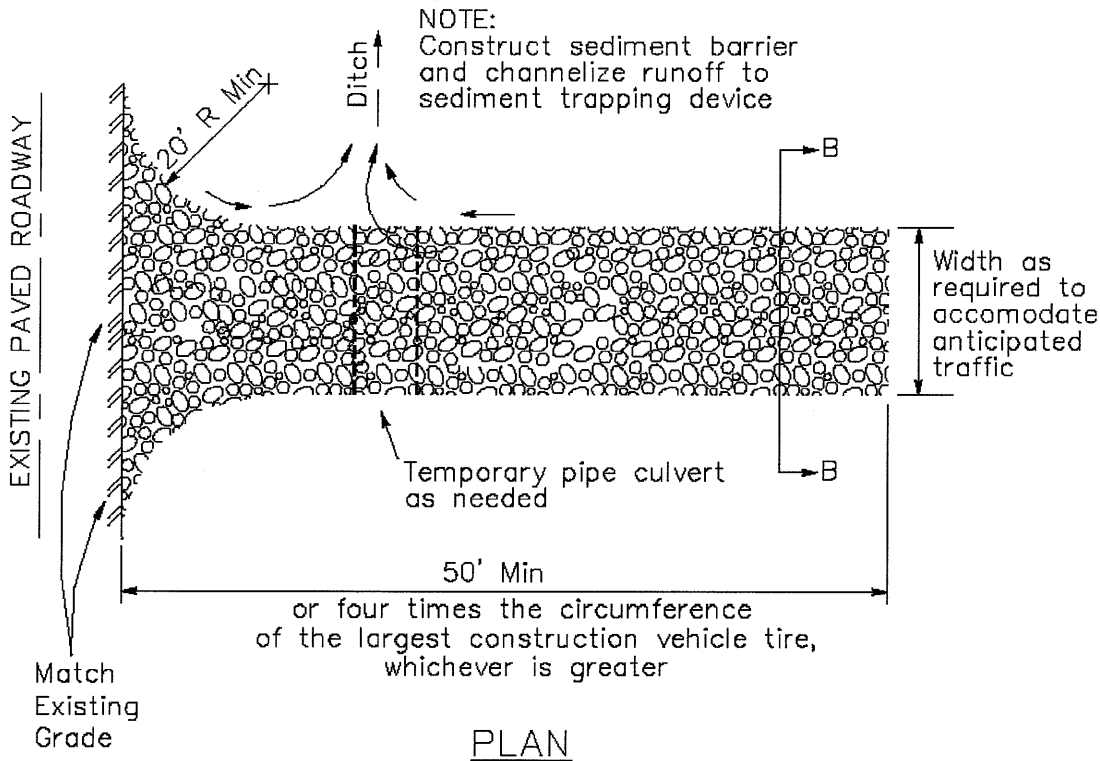

PLAN
NTS

Stabilized Construction Entrance/Exit TC-1

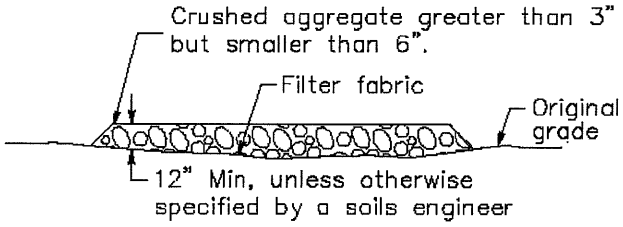

SECTION B–B
NTS

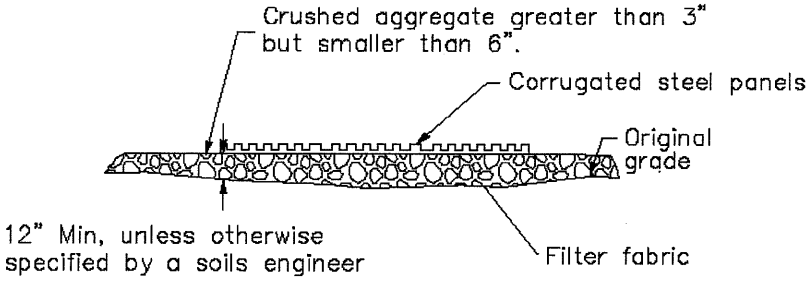

SECTION A–A
NOT TO SCALE

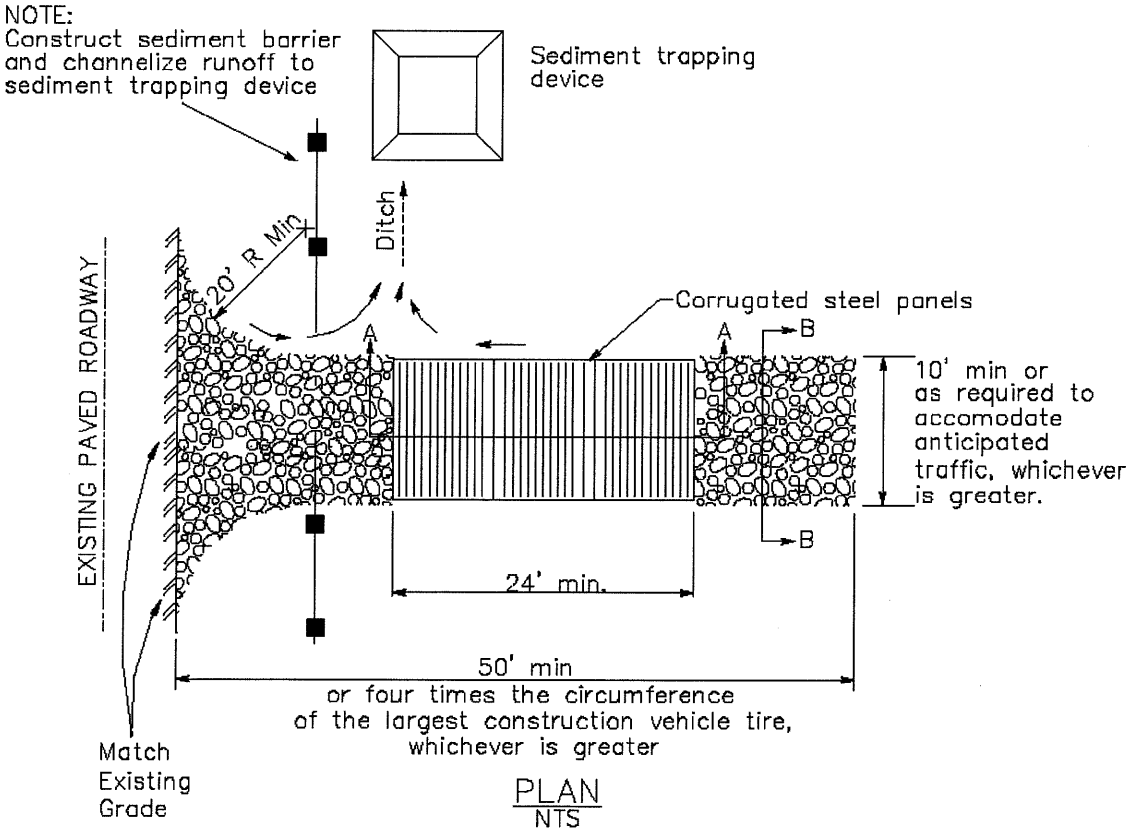

PLAN
NTS

Stabilized Construction Roadway TC-2

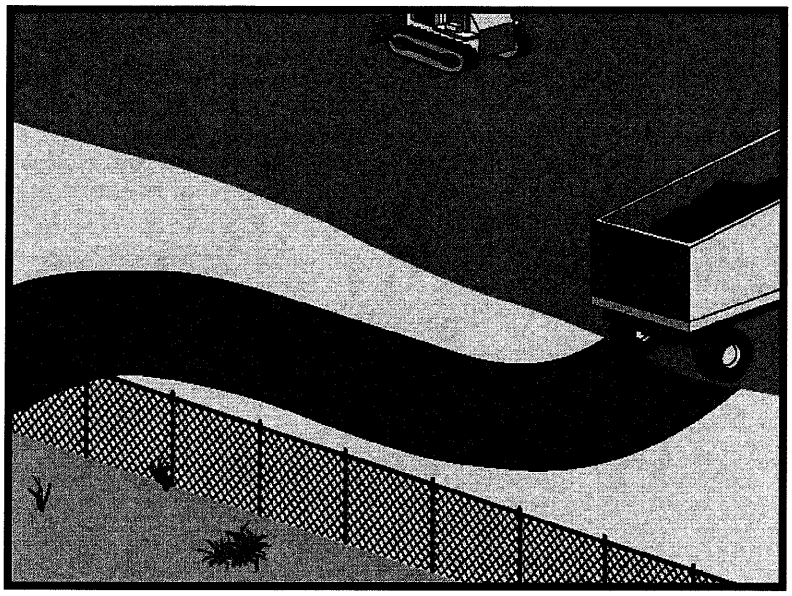

Objectives

EC	Erosion Control	☒
SE	Sediment Control	☒
TC	Tracking Control	☑
WE	Wind Erosion Control	
NS	Non-Stormwater Management Control	
WM	Waste Management and Materials Pollution Control	

Legend:

☑ **Primary Objective**

☒ **Secondary Objective**

Targeted Constituents

Sediment	☑
Nutrients	
Trash	
Metals	
Bacteria	
Oil and Grease	
Organics	

Potential Alternatives

None

Description and Purpose

Access roads, subdivision roads, parking areas, and other onsite vehicle transportation routes should be stabilized immediately after grading, and frequently maintained to prevent erosion and control dust.

Suitable Applications

This BMP should be applied for the following conditions:

- Temporary Construction Traffic:
  - Phased construction projects and offsite road access
  - Construction during wet weather
- Construction roadways and detour roads:
  - Where mud tracking is a problem during wet weather
  - Where dust is a problem during dry weather
  - Adjacent to water bodies
  - Where poor soils are encountered

Limitations

- The roadway must be removed or paved when construction is complete.

CASQA
CALIFORNIA STORMWATER QUALITY ASSOCIATION

- Certain chemical stabilization methods may cause stormwater or soil pollution and should not be used. See WE-1, Wind Erosion Control.
- Management of construction traffic is subject to air quality control measures. Contact the local air quality management agency.
- Materials will likely need to be removed prior to final project grading and stabilization.
- Use of this BMP may not be applicable to very short duration projects.

Implementation

General

Areas that are graded for construction vehicle transport and parking purposes are especially susceptible to erosion and dust. The exposed soil surface is continually disturbed, leaving no opportunity for vegetative stabilization. Such areas also tend to collect and transport runoff waters along their surfaces. During wet weather, they often become muddy quagmires that generate significant quantities of sediment that may pollute nearby streams or be transported offsite on the wheels of construction vehicles. Dirt roads can become so unstable during wet weather that they are virtually unusable.

Efficient construction road stabilization not only reduces onsite erosion but also can significantly speed onsite work, avoid instances of immobilized machinery and delivery vehicles, and generally improve site efficiency and working conditions during adverse weather

Installation/Application Criteria

Permanent roads and parking areas should be paved as soon as possible after grading. As an alternative where construction will be phased, the early application of gravel or chemical stabilization may solve potential erosion and stability problems. Temporary gravel roadway should be considered during the rainy season and on slopes greater than 5%.

Temporary roads should follow the contour of the natural terrain to the maximum extent possible. Slope should not exceed 15%. Roadways should be carefully graded to drain transversely. Provide drainage swales on each side of the roadway in the case of a crowned section or one side in the case of a super elevated section. Simple gravel berms without a trench can also be used.

Installed inlets should be protected to prevent sediment laden water from entering the storm sewer system (SE-10, Storm Drain Inlet Protection). In addition, the following criteria should be considered.

- Road should follow topographic contours to reduce erosion of the roadway.
- The roadway slope should not exceed 15%.
- Chemical stabilizers or water are usually required on gravel or dirt roads to prevent dust (WE-1, Wind Erosion Control).
- Properly grade roadway to prevent runoff from leaving the construction site.
- Design stabilized access to support heaviest vehicles and equipment that will use it.

- Stabilize roadway using aggregate, asphalt concrete, or concrete based on longevity, required performance, and site conditions. The use of cold mix asphalt or asphalt concrete (AC) grindings for stabilized construction roadway is not allowed.
- Coordinate materials with those used for stabilized construction entrance/exit points.
- If aggregate is selected, place crushed aggregate over geotextile fabric to at least 12 in. depth. A crushed aggregate greater than 3 in. but smaller than 6 in. should be used.

Inspection and Maintenance

- Inspect and verify that activity–based BMPs are in place prior to the commencement of associated activities. While activities associated with the BMP are under way, impact weekly during the rainy season and of two-week intervals in the non-rainy season to verify continued BMP implementation.
- Keep all temporary roadway ditches clear.
- When no longer required, remove stabilized construction roadway and re-grade and repair slopes.
- Periodically apply additional aggregate on gravel roads.
- Active dirt construction roads are commonly watered three or more times per day during the dry season.

Costs

Gravel construction roads are moderately expensive, but cost is often balanced by reductions in construction delay. No additional costs for dust control on construction roads should be required above that needed to meet local air quality requirements.

References

Blueprint for a Clean Bay: Best Management Practices to Prevent Stormwater Pollution from Construction Related Activities; Santa Clara Valley Nonpoint Source Pollution Control Program, 1995.

Coastal Nonpoint Pollution Control Program; Program Development and Approval Guidance, Working Group, Working Paper; USEPA, April 1992.

Manual of Standards of Erosion and Sediment Control Measures, Association of Bay Area Governments, May 1995.

Stormwater Quality Handbooks Construction Site Best Management Practices (BMPs) Manual, State of California Department of Transportation (Caltrans), November 2000.

Stormwater Management for Construction Activities, Developing Pollution Prevention Plans and Best Management Practices, EPA 832-R-92005; USEPA, April 1992.

Stormwater Management of the Puget Sound Basin, Technical Manual, Publication #91-75, Washington State Department of Ecology, February 1992.

Virginia Erosion and Sedimentation Control Handbook, Virginia Department of Conservation and Recreation, Division of Soil and Water Conservation, 1991.

Water Quality Management Plan for the Lake Tahoe Region, Volume II, Handbook of Management Practices, Tahoe Regional Planning Agency, November 1988.

Entrance/Outlet Tire Wash TC-3

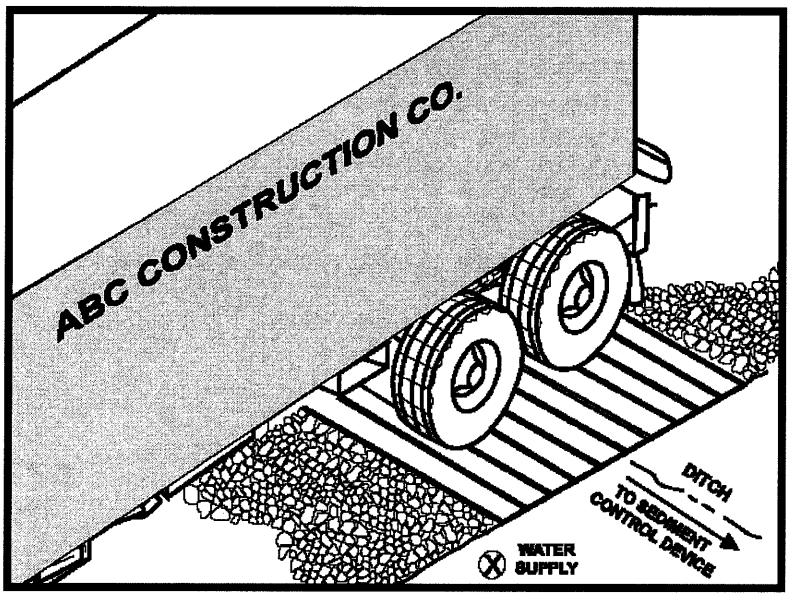

Objectives

EC	Erosion Control	
SE	Sediment Control	☒
TC	Tracking Control	☑
WE	Wind Erosion Control	
NS	Non-Stormwater Management Control	
WM	Waste Management and Materials Pollution Control	

Legend:

☑ **Primary Objective**

☒ **Secondary Objective**

Targeted Constituents

Sediment	☑
Nutrients	
Trash	
Metals	
Bacteria	
Oil and Grease	
Organics	

Potential Alternatives

TC-1 Stabilized Construction Entrance/Exit

Description and Purpose

A tire wash is an area located at stabilized construction access points to remove sediment from tires and under carriages and to prevent sediment from being transported onto public roadways.

Suitable Applications

Tire washes may be used on construction sites where dirt and mud tracking onto public roads by construction vehicles may occur.

Limitations

- The tire wash requires a supply of wash water.
- A turnout or doublewide exit is required to avoid having entering vehicles drive through the wash area.
- Do not use where wet tire trucks leaving the site leave the road dangerously slick.

Implementation

- Incorporate with a stabilized construction entrance/exit. See TC-1, Stabilized Construction Entrance/Exit.
- Construct on level ground when possible, on a pad of coarse aggregate greater than 3 in. but smaller than 6 in. A geotextile fabric should be placed below the aggregate.
- Wash rack should be designed and constructed/manufactured for anticipated traffic loads.

CASQA
CALIFORNIA STORMWATER QUALITY ASSOCIATION

- Provide a drainage ditch that will convey the runoff from the wash area to a sediment trapping device. The drainage ditch should be of sufficient grade, width, and depth to carry the wash runoff.
- Use hoses with automatic shutoff nozzles to prevent hoses from being left on.
- Require that all employees, subcontractors, and others that leave the site with mud caked tires and undercarriages to use the wash facility.
- Implement SC-7, Street Sweeping and Vacuuming, as needed.

Costs

Costs are low for installation of wash rack.

Inspection and Maintenance

- Inspect and verify that activity–based BMPs are in place prior to the commencement of associated activities. While activities associated with the BMP are under way, inspect weekly during the rainy season and of two-week intervals in the non-rainy season to verify continued BMP implementation.
- Inspect BMPs subject to non-stormwater discharge daily while non-stormwater discharges occur.
- Remove accumulated sediment in wash rack and/or sediment trap to maintain system performance.
- Inspect routinely for damage and repair as needed.

References

Blueprint for a Clean Bay: Best Management Practices to Prevent Stormwater Pollution from Construction Related Activities; Santa Clara Valley Nonpoint Source Pollution Control Program, 1995.

Coastal Nonpoint Pollution Control Program; Program Development and Approval Guidance, Working Group, Working Paper; USEPA, April 1992.

Manual of Standards of Erosion and Sediment Control Measures, Association of Bay Area Governments, May 1995.

Stormwater Quality Handbooks Construction Site Best Management Practices (BMPs) Manual, State of California Department of Transportation (Caltrans), November 2000.

Stormwater Management for Construction Activities, Developing Pollution Prevention Plans and Best Management Practices, EPA 832-R-92005; USEPA, April 1992.

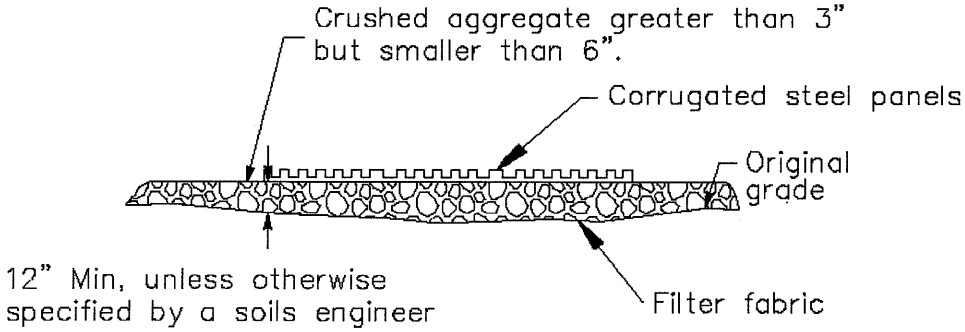

SECTION A–A
NOT TO SCALE

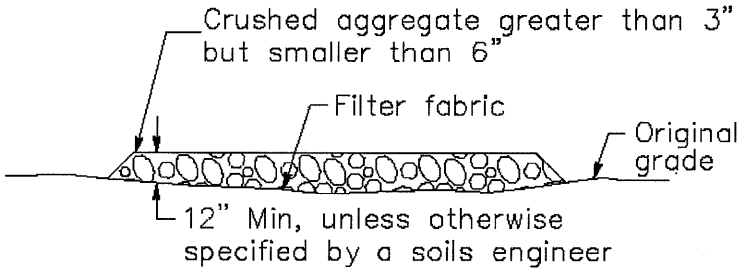

SECTION B–B
NTS

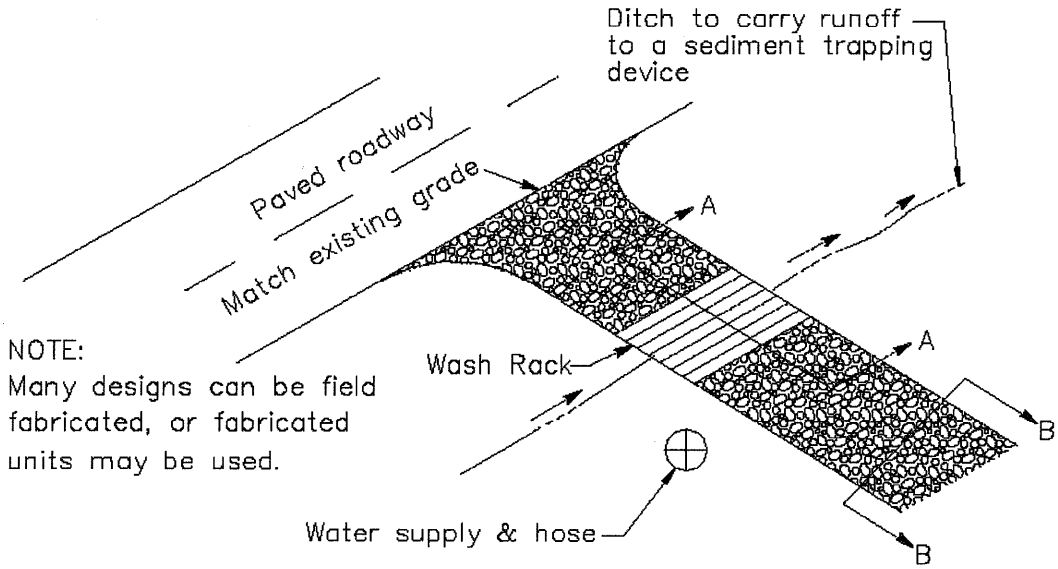

TYPICAL TIRE WASH
NOT TO SCALE

Material Delivery and Storage WM-1

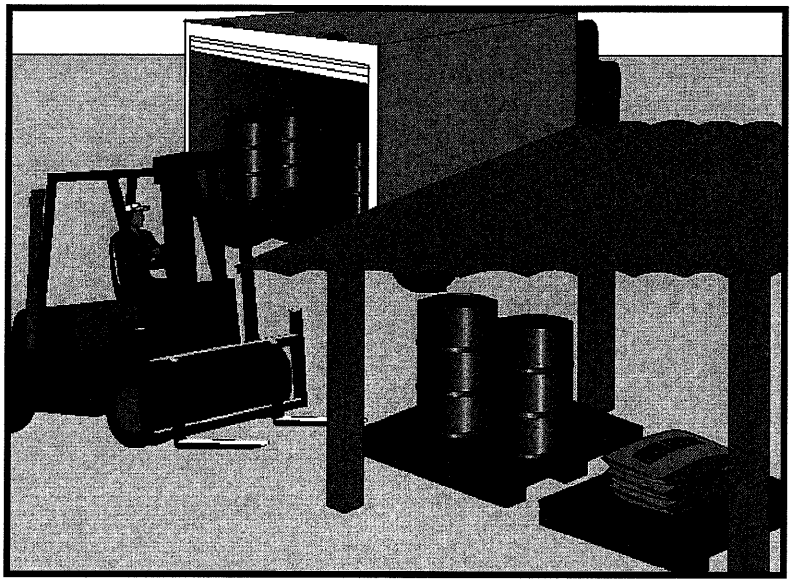

Objectives

EC	Erosion Control	
SE	Sediment Control	
TC	Tracking Control	
WE	Wind Erosion Control	
NS	Non-Stormwater Management Control	
WM	Waste Management and Materials Pollution Control	☑

Legend:

☑ **Primary Objective**

☒ **Secondary Objective**

Targeted Constituents

Sediment	☑
Nutrients	☑
Trash	☑
Metals	☑
Bacteria	
Oil and Grease	☑
Organics	☑

Potential Alternatives

None

Description and Purpose

Prevent, reduce, or eliminate the discharge of pollutants from material delivery and storage to the stormwater system or watercourses by minimizing the storage of hazardous materials onsite, storing materials in a designated area, installing secondary containment, conducting regular inspections, and training employees and subcontractors.

This best management practice covers only material delivery and storage. For other information on materials, see WM-2, Material Use, or WM-4, Spill Prevention and Control. For information on wastes, see the waste management BMPs in this section.

Suitable Applications

These procedures are suitable for use at all construction sites with delivery and storage of the following materials:

- Soil stabilizers and binders
- Pesticides and herbicides
- Fertilizers
- Detergents
- Plaster
- Petroleum products such as fuel, oil, and grease
- Asphalt and concrete components

CASQA
CALIFORNIA STORMWATER QUALITY ASSOCIATION

- Hazardous chemicals such as acids, lime, glues, adhesives, paints, solvents, and curing compounds
- Concrete compounds
- Other materials that may be detrimental if released to the environment

Limitations

- Space limitation may preclude indoor storage.
- Storage sheds often must meet building and fire code requirements.

Implementation

The following steps should be taken to minimize risk:

- Temporary storage area should be located away from vehicular traffic.
- Material Safety Data Sheets (MSDS) should be supplied for all materials stored.
- Construction site areas should be designated for material delivery and storage.
- Material delivery and storage areas should be located near the construction entrances, away from waterways, if possible.
  - Avoid transport near drainage paths or waterways.
  - Surround with earth berms. See EC-9, Earth Dikes and Drainage Swales.
  - Place in an area which will be paved.
- Storage of reactive, ignitable, or flammable liquids must comply with the fire codes of your area. Contact the local Fire Marshal to review site materials, quantities, and proposed storage area to determine specific requirements. See the Flammable and Combustible Liquid Code, NFPA30.
- An up to date inventory of materials delivered and stored onsite should be kept.
- Hazardous materials storage onsite should be minimized.
- Hazardous materials should be handled as infrequently as possible.
- During the rainy season, consider storing materials in a covered area. Store materials in secondary containments such as earthen dike, horse trough, or even a children's wading pool for non-reactive materials such as detergents, oil, grease, and paints. Small amounts of material may be secondarily contained in "bus boy" trays or concrete mixing trays.
- Do not store chemicals, drums, or bagged materials directly on the ground. Place these items on a pallet and, when possible, in secondary containment.

- If drums must be kept uncovered, store them at a slight angle to reduce ponding of rainwater on the lids to reduce corrosion. Domed plastic covers are inexpensive and snap to the top of drums, preventing water from collecting.
- Chemicals should be kept in their original labeled containers.
- Employees and subcontractors should be trained on the proper material delivery and storage practices.
- Employees trained in emergency spill cleanup procedures must be present when dangerous materials or liquid chemicals are unloaded.
- If significant residual materials remain on the ground after construction is complete, properly remove materials and any contaminated soil. See WM-7, Contaminated Soil Management. If the area is to be paved, pave as soon as materials are removed to stabilize the soil.

Material Storage Areas and Practices

- Liquids, petroleum products, and substances listed in 40 CFR Parts 110, 117, or 302 should be stored in approved containers and drums and should not be overfilled. Containers and drums should be placed in temporary containment facilities for storage.
- A temporary containment facility should provide for a spill containment volume able to contain precipitation from a 25 year storm event, plus the greater of 10% of the aggregate volume of all containers or 100% of the capacity of the largest container within its boundary, whichever is greater.
- A temporary containment facility should be impervious to the materials stored therein for a minimum contact time of 72 hours.
- A temporary containment facility should be maintained free of accumulated rainwater and spills. In the event of spills or leaks, accumulated rainwater and spills should be collected and placed into drums. These liquids should be handled as a hazardous waste unless testing determines them to be non-hazardous. All collected liquids or non-hazardous liquids should be sent to an approved disposal site.
- Sufficient separation should be provided between stored containers to allow for spill cleanup and emergency response access.
- Incompatible materials, such as chlorine and ammonia, should not be stored in the same temporary containment facility.
- Throughout the rainy season, each temporary containment facility should be covered during non-working days, prior to, and during rain events.
- Materials should be stored in their original containers and the original product labels should be maintained in place in a legible condition. Damaged or otherwise illegible labels should be replaced immediately.

- Bagged and boxed materials should be stored on pallets and should not be allowed to accumulate on the ground. To provide protection from wind and rain throughout the rainy season, bagged and boxed materials should be covered during non-working days and prior to and during rain events.
- Stockpiles should be protected in accordance with WM-3, Stockpile Management.
- Materials should be stored indoors within existing structures or sheds when available.
- Proper storage instructions should be posted at all times in an open and conspicuous location.
- An ample supply of appropriate spill clean up material should be kept near storage areas.
- Also see WM-6, Hazardous Waste Management, for storing of hazardous materials.

Material Delivery Practices

- Keep an accurate, up-to-date inventory of material delivered and stored onsite.
- Arrange for employees trained in emergency spill cleanup procedures to be present when dangerous materials or liquid chemicals are unloaded.

Spill Cleanup

- Contain and clean up any spill immediately.
- Properly remove and dispose of any hazardous materials or contaminated soil if significant residual materials remain on the ground after construction is complete. See WM-7, Contaminated Soil Management.
- See WM-4, Spill Prevention and Control, for spills of chemicals and/or hazardous materials.

Cost

- The largest cost of implementation may be in the construction of a materials storage area that is covered and provides secondary containment.

Inspection and Maintenance

- Inspect and verify that activity–based BMPs are in place prior to the commencement of associated activities. While activities associated with the BMP are under way, inspect weekly during the rainy season and of two-week intervals in the non-rainy season to verify continued BMP implementation.
- Keep an ample supply of spill cleanup materials near the storage area.
- Keep storage areas clean, well organized, and equipped with ample cleanup supplies as appropriate for the materials being stored.
- Repair or replace perimeter controls, containment structures, covers, and liners as needed to maintain proper function.

References

Blueprint for a Clean Bay: Best Management Practices to Prevent Stormwater Pollution from Construction Related Activities; Santa Clara Valley Nonpoint Source Pollution Control Program, 1995.

Coastal Nonpoint Pollution Control Program: Program Development and Approval Guidance, Working Group Working Paper; USEPA, April 1992.

Stormwater Quality Handbooks - Construction Site Best Management Practices (BMPs) Manual, State of California Department of Transportation (Caltrans), November 2000.

Stormwater Management for Construction Activities; Developing Pollution Prevention Plans and Best Management Practice, EPA 832-R-92005; USEPA, April 1992.

Material Use

WM-2

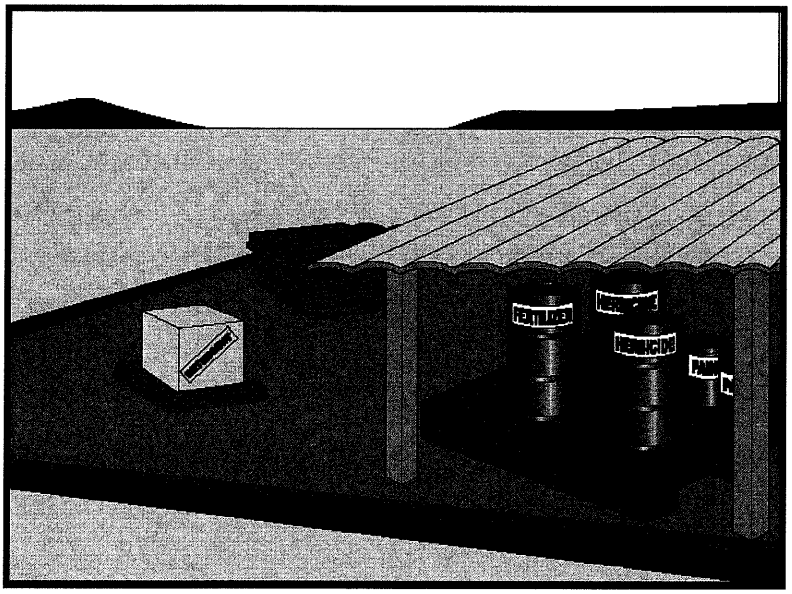

Objectives

EC	Erosion Control	
SE	Sediment Control	
TC	Tracking Control	
WE	Wind Erosion Control	
NS	Non-Stormwater Management Control	
WM	Waste Management and Materials Pollution Control	☑

Legend:

☑ **Primary Objective**

☒ **Secondary Objective**

Targeted Constituents

Sediment	☑
Nutrients	☑
Trash	☑
Metals	☑
Bacteria	
Oil and Grease	☑
Organics	☑

Potential Alternatives

None

Description and Purpose

Prevent or reduce the discharge of pollutants to the storm drain system or watercourses from material use by using alternative products, minimizing hazardous material use onsite, and training employees and subcontractors.

Suitable Applications

This BMP is suitable for use at all construction projects. These procedures apply when the following materials are used or prepared onsite:

- Pesticides and herbicides
- Fertilizers
- Detergents
- Plaster
- Petroleum products such as fuel, oil, and grease
- Asphalt and other concrete components
- Other hazardous chemicals such as acids, lime, glues, adhesives, paints, solvents, and curing compounds
- Concrete compounds
- Other materials that may be detrimental if released to the environment

CASQA
CALIFORNIA STORMWATER QUALITY ASSOCIATION

Limitations

Safer alternative building and construction products may not be available or suitable in every instance.

Implementation

The following steps should be taken to minimize risk:

- Minimize use of hazardous materials onsite.
- Follow manufacturer instructions regarding uses, protective equipment, ventilation, flammability, and mixing of chemicals.
- Train personnel who use pesticides. The California Department of Pesticide Regulation and county agricultural commissioners license pesticide dealers, certify pesticide applicators, and conduct onsite inspections.
- Do not over-apply fertilizers, herbicides, and pesticides. Prepare only the amount needed. Follow the recommended usage instructions. Over-application is expensive and environmentally harmful. Unless on steep slopes, till fertilizers into the soil rather than hydro seeding. Apply surface dressings in several smaller applications, as opposed to one large application, to allow time for infiltration and to avoid excess material being carried offsite by runoff. Do not apply these chemicals just before it rains.
- Train employees and subcontractors in proper material use.
- Supply Material Safety Data Sheets (MSDS) for all materials.
- Dispose of latex paint and paint cans, used brushes, rags, absorbent materials, and drop cloths, when thoroughly dry and are no longer hazardous, with other construction debris.
- Do not remove the original product label; it contains important safety and disposal information. Use the entire product before disposing of the container.
- Mix paint indoors or in a containment area. Never clean paintbrushes or rinse paint containers into a street, gutter, storm drain, or watercourse. Dispose of any paint thinners, residue, and sludge(s) that cannot be recycled, as hazardous waste.
- For water-based paint, clean brushes to the extent practicable, and rinse to a drain leading to a sanitary sewer where permitted, or into a concrete washout pit or temporary sediment trap. For oil-based paints, clean brushes to the extent practicable, and filter and reuse thinners and solvents.
- Use recycled and less hazardous products when practical. Recycle residual paints, solvents, non-treated lumber, and other materials.
- Use materials only where and when needed to complete the construction activity. Use safer alternative materials as much as possible. Reduce or eliminate use of hazardous materials onsite when practical.

- Require contractors to complete the "Report of Chemical Spray Forms" when spraying herbicides and pesticides.
- Keep an ample supply of spill clean up material near use areas. Train employees in spill clean up procedures.
- Avoid exposing applied materials to rainfall and runoff unless sufficient time has been allowed for them to dry.

Costs

All of the above are low cost measures.

Inspection and Maintenance

- Inspect and verify that activity–based BMPs are in place prior to the commencement of associated activities. While activities associated with the BMP are under way, inspect weekly during the rainy season and at two–week intervals in the non-rainy season to verify continued BMP implementation.
- Maintenance of this best management practice is minimal.
- Spot check employees and subcontractors throughout the job to ensure appropriate practices are being employed.

References

Blueprint for a Clean Bay: Best Management Practices to Prevent Stormwater Pollution from Construction Related Activities; Santa Clara Valley Nonpoint Source Pollution Control Program, 1995.

Coastal Nonpoint Pollution Control Program: Program Development and Approval Guidance, Working Group Working Paper; USEPA, April 1992.

Stormwater Quality Handbooks - Construction Site Best Management Practices (BMPs) Manual, State of California Department of Transportation (Caltrans), November 2000.

Stormwater Management for Construction Activities; Developing Pollution Prevention Plans and Best Management Practice, EPA 832-R-92005; USEPA, April 1992.

Stockpile Management WM-3

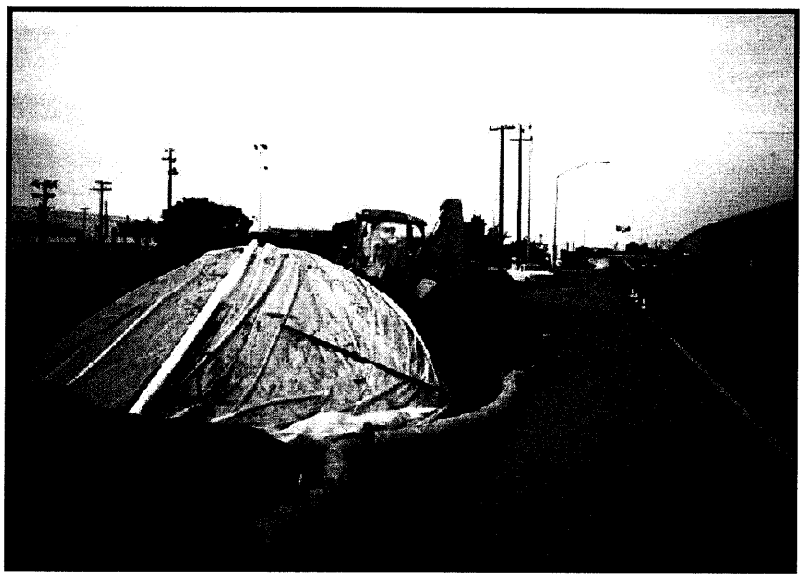

Objectives

EC	Erosion Control	
SE	Sediment Control	
TC	Tracking Control	
WE	Wind Erosion Control	
NS	Non-Stormwater Management Control	
WM	Waste Management and Materials Pollution Control	☑

Legend:

☑ **Primary Objective**

☒ **Secondary Objective**

Targeted Constituents

Sediment	☑
Nutrients	☑
Trash	☑
Metals	☑
Bacteria	
Oil and Grease	☑
Organics	☑

Potential Alternatives

None

Description and Purpose

Stockpile Management procedures and practices are designed to reduce or eliminate air and stormwater pollution from stockpiles of soil, paving materials such as portland cement concrete (PCC) rubble, asphalt concrete (AC), asphalt concrete rubble, aggregate base, aggregate sub base or pre-mixed aggregate, asphalt minder (so called "cold mix" asphalt), and pressure treated wood.

Suitable Applications

Implement in all projects that stockpile soil and other materials.

Limitations

None identified.

Implementation

Protection of stockpiles is a year-round requirement. To properly manage stockpiles:

- Locate stockpiles a minimum of 50 ft away from concentrated flows of stormwater, drainage courses, and inlets.
- Protect all stockpiles from stormwater runon using a temporary perimeter sediment barrier such as berms, dikes, fiber rolls, silt fences, sandbag, gravel bags, or straw bale barriers.

CASQA
CALIFORNIA STORMWATER QUALITY ASSOCIATION

- Implement wind erosion control practices as appropriate on all stockpiled material. For specific information, see WE-1, Wind Erosion Control.
- Manage stockpiles of contaminated soil in accordance with WM-7, Contaminated Soil Management.
- Place bagged materials on pallets and under cover.

Protection of Non-Active Stockpiles

Non-active stockpiles of the identified materials should be protected further as follows:

Soil stockpiles

- During the rainy season, soil stockpiles should be covered or protected with soil stabilization measures and a temporary perimeter sediment barrier at all times.
- During the non-rainy season, soil stockpiles should be covered or protected with a temporary perimeter sediment barrier prior to the onset of precipitation.

Stockpiles of Portland cement concrete rubble, asphalt concrete, asphalt concrete rubble, aggregate base, or aggregate sub base

- During the rainy season, the stockpiles should be covered or protected with a temporary perimeter sediment barrier at all times.
- During the non-rainy season, the stockpiles should be covered or protected with a temporary perimeter sediment barrier prior to the onset of precipitation.

Stockpiles of "cold mix"

- During the rainy season, cold mix stockpiles should be placed on and covered with plastic or comparable material at all times.
- During the non-rainy season, cold mix stockpiles should be placed on and covered with plastic or comparable material prior to the onset of precipitation.

Stockpiles/Storage of pressure treated wood with copper, chromium, and arsenic or ammonical, copper, zinc, and arsenate

- During the rainy season, treated wood should be covered with plastic or comparable material at all times.
- During the non-rainy season, treated wood should be covered with plastic or comparable material at all times and cold mix stockpiles should be placed on and covered with plastic or comparable material prior to the onset of precipitation.

Protection of Active Stockpiles

Active stockpiles of the identified materials should be protected further as follows:

- All stockpiles should be protected with a temporary linear sediment barrier prior to the onset of precipitation.
- Stockpiles of "cold mix" should be placed on and covered with plastic or comparable material prior to the onset of precipitation.

Costs

All of the above are low cost measures.

Inspection and Maintenance

- Inspect and verify that activity–based BMPs are in place prior to the commencement of associated activities. While activities associated with the BMP are under way, inspect weekly during the rainy season and of two-week intervals in the non-rainy season to verify continued BMP implementation

- Repair and/or replace perimeter controls and covers as needed to keep them functioning properly.

References

Stormwater Quality Handbooks - Construction Site Best Management Practices (BMPs) Manual, State of California Department of Transportation (Caltrans), November 2000.

Spill Prevention and Control WM-4

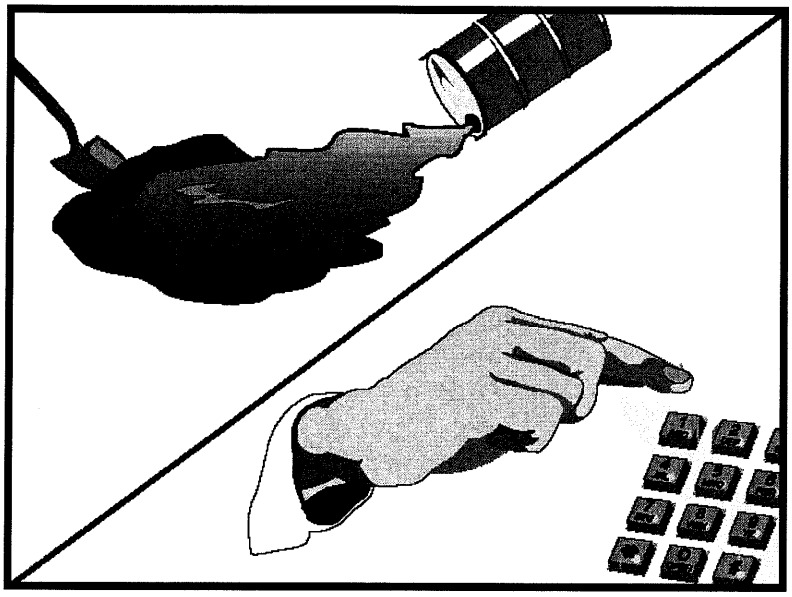

Objectives

EC	Erosion Control	
SE	Sediment Control	
TC	Tracking Control	
WE	Wind Erosion Control	
NS	Non-Stormwater Management Control	
WM	Waste Management and Materials Pollution Control	☑

Legend:

☑ **Primary Objective**

☒ **Secondary Objective**

Targeted Constituents

Sediment	☑
Nutrients	☑
Trash	☑
Metals	☑
Bacteria	
Oil and Grease	☑
Organics	☑

Potential Alternatives

None

Description and Purpose

Prevent or reduce the discharge of pollutants to drainage systems or watercourses from leaks and spills by reducing the chance for spills, stopping the source of spills, containing and cleaning up spills, properly disposing of spill materials, and training employees.

This best management practice covers only spill prevention and control. However, WM-1, Materials Delivery and Storage, and WM-2, Material Use, also contain useful information, particularly on spill prevention. For information on wastes, see the waste management BMPs in this section.

Suitable Applications

This BMP is suitable for all construction projects. Spill control procedures are implemented anytime chemicals or hazardous substances are stored on the construction site, including the following materials:

- Soil stabilizers/binders
- Dust palliatives
- Herbicides
- Growth inhibitors
- Fertilizers
- Deicing/anti-icing chemicals

CASQA
CALIFORNIA STORMWATER QUALITY ASSOCIATION

- Fuels
- Lubricants
- Other petroleum distillates

Limitations

- In some cases it may be necessary to use a private spill cleanup company.
- This BMP applies to spills caused by the contractor and subcontractors.
- Procedures and practices presented in this BMP are general. Contractor should identify appropriate practices for the specific materials used or stored onsite

Implementation

The following steps will help reduce the stormwater impacts of leaks and spills:

Education

- Be aware that different materials pollute in different amounts. Make sure that each employee knows what a "significant spill" is for each material they use, and what is the appropriate response for "significant" and "insignificant" spills.
- Educate employees and subcontractors on potential dangers to humans and the environment from spills and leaks.
- Hold regular meetings to discuss and reinforce appropriate disposal procedures (incorporate into regular safety meetings).
- Establish a continuing education program to indoctrinate new employees.
- Have contractor's superintendent or representative oversee and enforce proper spill prevention and control measures.

General Measures

- To the extent that the work can be accomplished safely, spills of oil, petroleum products, substances listed under 40 CFR parts 110,117, and 302, and sanitary and septic wastes should be contained and cleaned up immediately.
- Store hazardous materials and wastes in covered containers and protect from vandalism.
- Place a stockpile of spill cleanup materials where it will be readily accessible.
- Train employees in spill prevention and cleanup.
- Designate responsible individuals to oversee and enforce control measures.
- Spills should be covered and protected from stormwater runon during rainfall to the extent that it doesn't compromise clean up activities.
- Do not bury or wash spills with water.

- Store and dispose of used clean up materials, contaminated materials, and recovered spill material that is no longer suitable for the intended purpose in conformance with the provisions in applicable BMPs.
- Do not allow water used for cleaning and decontamination to enter storm drains or watercourses. Collect and dispose of contaminated water in accordance with WM-10, Liquid Waste Management.
- Contain water overflow or minor water spillage and do not allow it to discharge into drainage facilities or watercourses.
- Place proper storage, cleanup, and spill reporting instructions for hazardous materials stored or used on the project site in an open, conspicuous, and accessible location.
- Keep waste storage areas clean, well organized, and equipped with ample cleanup supplies as appropriate for the materials being stored. Perimeter controls, containment structures, covers, and liners should be repaired or replaced as needed to maintain proper function.

Cleanup

- Clean up leaks and spills immediately.
- Use a rag for small spills on paved surfaces, a damp mop for general cleanup, and absorbent material for larger spills. If the spilled material is hazardous, then the used cleanup materials are also hazardous and must be sent to either a certified laundry (rags) or disposed of as hazardous waste.
- Never hose down or bury dry material spills. Clean up as much of the material as possible and dispose of properly. See the waste management BMPs in this section for specific information.

Minor Spills

- Minor spills typically involve small quantities of oil, gasoline, paint, etc. which can be controlled by the first responder at the discovery of the spill.
- Use absorbent materials on small spills rather than hosing down or burying the spill.
- Absorbent materials should be promptly removed and disposed of properly.
- Follow the practice below for a minor spill:
  - Contain the spread of the spill.
  - Recover spilled materials.
  - Clean the contaminated area and properly dispose of contaminated materials.

Semi-Significant Spills

- Semi-significant spills still can be controlled by the first responder along with the aid of other personnel such as laborers and the foreman, etc. This response may require the cessation of all other activities.

- Spills should be cleaned up immediately:
  - Contain spread of the spill.
  - Notify the project foreman immediately.
  - If the spill occurs on paved or impermeable surfaces, clean up using "dry" methods (absorbent materials, cat litter and/or rags). Contain the spill by encircling with absorbent materials and do not let the spill spread widely.
  - If the spill occurs in dirt areas, immediately contain the spill by constructing an earthen dike. Dig up and properly dispose of contaminated soil.
  - If the spill occurs during rain, cover spill with tarps or other material to prevent contaminating runoff.

Significant/Hazardous Spills

- For significant or hazardous spills that cannot be controlled by personnel in the immediate vicinity, the following steps should be taken:
  - Notify the local emergency response by dialing 911. In addition to 911, the contractor will notify the proper county officials. It is the contractor's responsibility to have all emergency phone numbers at the construction site.
  - Notify the Governor's Office of Emergency Services Warning Center, (916) 845-8911.
  - For spills of federal reportable quantities, in conformance with the requirements in 40 CFR parts 110,119, and 302, the contractor should notify the National Response Center at (800) 424-8802.
  - Notification should first be made by telephone and followed up with a written report.
  - The services of a spills contractor or a Haz-Mat team should be obtained immediately. Construction personnel should not attempt to clean up until the appropriate and qualified staffs have arrived at the job site.
  - Other agencies which may need to be consulted include, but are not limited to, the Fire Department, the Public Works Department, the Coast Guard, the Highway Patrol, the City/County Police Department, Department of Toxic Substances, California Division of Oil and Gas, Cal/OSHA, etc.

Reporting

- Report significant spills to local agencies, such as the Fire Department; they can assist in cleanup.
- Federal regulations require that any significant oil spill into a water body or onto an adjoining shoreline be reported to the National Response Center (NRC) at 800-424-8802 (24 hours).

Use the following measures related to specific activities:

Vehicle and Equipment Maintenance

- If maintenance must occur onsite, use a designated area and a secondary containment, located away from drainage courses, to prevent the runon of stormwater and the runoff of spills.
- Regularly inspect onsite vehicles and equipment for leaks and repair immediately
- Check incoming vehicles and equipment (including delivery trucks, and employee and subcontractor vehicles) for leaking oil and fluids. Do not allow leaking vehicles or equipment onsite.
- Always use secondary containment, such as a drain pan or drop cloth, to catch spills or leaks when removing or changing fluids.
- Place drip pans or absorbent materials under paving equipment when not in use.
- Use absorbent materials on small spills rather than hosing down or burying the spill. Remove the absorbent materials promptly and dispose of properly.
- Promptly transfer used fluids to the proper waste or recycling drums. Don't leave full drip pans or other open containers lying around
- Oil filters disposed of in trashcans or dumpsters can leak oil and pollute stormwater. Place the oil filter in a funnel over a waste oil-recycling drum to drain excess oil before disposal. Oil filters can also be recycled. Ask the oil supplier or recycler about recycling oil filters.
- Store cracked batteries in a non-leaking secondary container. Do this with all cracked batteries even if you think all the acid has drained out. If you drop a battery, treat it as if it is cracked. Put it into the containment area until you are sure it is not leaking.

Vehicle and Equipment Fueling

- If fueling must occur onsite, use designate areas, located away from drainage courses, to prevent the runon of stormwater and the runoff of spills.
- Discourage "topping off" of fuel tanks.
- Always use secondary containment, such as a drain pan, when fueling to catch spills/ leaks.

Costs

Prevention of leaks and spills is inexpensive. Treatment and/ or disposal of contaminated soil or water can be quite expensive.

Inspection and Maintenance

- Inspect and verify that activity–based BMPs are in place prior to the commencement of associated activities. While activities associated with the BMP are under way, inspect weekly during the rainy season and of two-week intervals in the non-rainy season to verify continued BMP implementation.
- Inspect BMPs subject to non-stormwater discharge daily while non-stormwater discharges occur.

- Keep ample supplies of spill control and cleanup materials onsite, near storage, unloading, and maintenance areas.
- Update your spill prevention and control plan and stock cleanup materials as changes occur in the types of chemicals onsite.

References

Blueprint for a Clean Bay: Best Management Practices to Prevent Stormwater Pollution from Construction Related Activities; Santa Clara Valley Nonpoint Source Pollution Control Program, 1995.

Stormwater Quality Handbooks - Construction Site Best Management Practices (BMPs) Manual, State of California Department of Transportation (Caltrans), November 2000.

Stormwater Management for Construction Activities; Developing Pollution Prevention Plans and Best Management Practice, EPA 832-R-92005; USEPA, April 1992.

Solid Waste Management WM-5

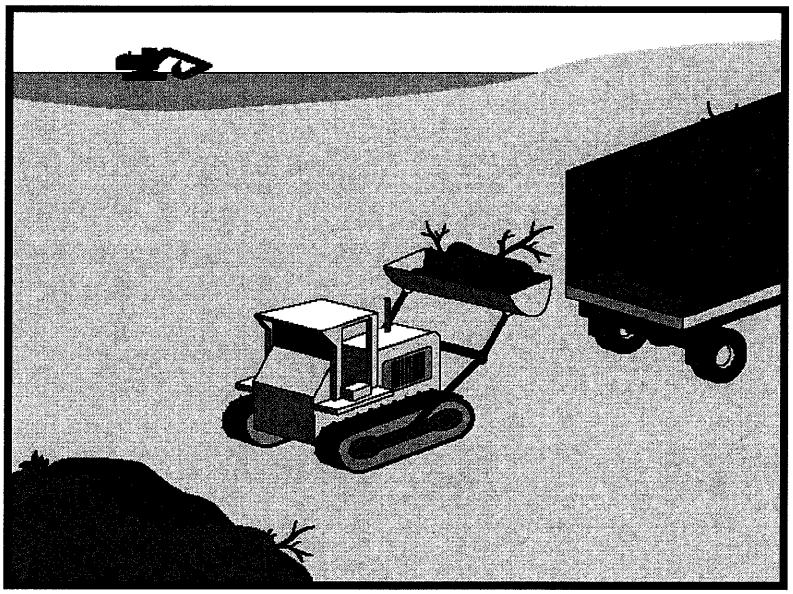

Objectives

EC	Erosion Control	
SE	Sediment Control	
TC	Tracking Control	
WE	Wind Erosion Control	
NS	Non-Stormwater Management Control	
WM	Waste Management and Materials Pollution Control	☑

Legend:

☑ **Primary Objective**

☒ **Secondary Objective**

Targeted Constituents

Sediment	☑
Nutrients	☑
Trash	☑
Metals	☑
Bacteria	
Oil and Grease	☑
Organics	☑

Potential Alternatives

None

Description and Purpose

Solid waste management procedures and practices are designed to prevent or reduce the discharge of pollutants to stormwater from solid or construction waste by providing designated waste collection areas and containers, arranging for regular disposal, and training employees and subcontractors.

Suitable Applications

This BMP is suitable for construction sites where the following wastes are generated or stored:

- Solid waste generated from trees and shrubs removed during land clearing, demolition of existing structures (rubble), and building construction
- Packaging materials including wood, paper, and plastic
- Scrap or surplus building materials including scrap metals, rubber, plastic, glass pieces and masonry products
- Domestic wastes including food containers such as beverage cans, coffee cups, paper bags, plastic wrappers, and cigarettes
- Construction wastes including brick, mortar, timber, steel and metal scraps, pipe and electrical cuttings, non-hazardous equipment parts, styrofoam and other materials used to transport and package construction materials

CASQA
CALIFORNIA STORMWATER QUALITY ASSOCIATION

- Highway planting wastes, including vegetative material, plant containers, and packaging materials

Limitations

Temporary stockpiling of certain construction wastes may not necessitate stringent drainage related controls during the non-rainy season or in desert areas with low rainfall.

Implementation

The following steps will help keep a clean site and reduce stormwater pollution:

- Select designated waste collection areas onsite.
- Inform trash-hauling contractors that you will accept only watertight dumpsters for onsite use. Inspect dumpsters for leaks and repair any dumpster that is not watertight.
- Locate containers in a covered area or in a secondary containment.
- Provide an adequate number of containers with lids or covers that can be placed over the container to keep rain out or to prevent loss of wastes when it is windy.
- Plan for additional containers and more frequent pickup during the demolition phase of construction.
- Collect site trash daily, especially during rainy and windy conditions.
- Remove this solid waste promptly since erosion and sediment control devices tend to collect litter.
- Make sure that toxic liquid wastes (used oils, solvents, and paints) and chemicals (acids, pesticides, additives, curing compounds) are not disposed of in dumpsters designated for construction debris.
- Do not hose out dumpsters on the construction site. Leave dumpster cleaning to the trash hauling contractor.
- Arrange for regular waste collection before containers overflow.
- Clean up immediately if a container does spill.
- Make sure that construction waste is collected, removed, and disposed of only at authorized disposal areas.

Education

- Have the contractor's superintendent or representative oversee and enforce proper solid waste management procedures and practices.
- Instruct employees and subcontractors on identification of solid waste and hazardous waste.
- Educate employees and subcontractors on solid waste storage and disposal procedures.

- Hold regular meetings to discuss and reinforce disposal procedures (incorporate into regular safety meetings).
- Require that employees and subcontractors follow solid waste handling and storage procedures.
- Prohibit littering by employees, subcontractors, and visitors.
- Minimize production of solid waste materials wherever possible.

Collection, Storage, and Disposal

- Littering on the project site should be prohibited.
- To prevent clogging of the storm drainage system, litter and debris removal from drainage grates, trash racks, and ditch lines should be a priority.
- Trash receptacles should be provided in the contractor's yard, field trailer areas, and at locations where workers congregate for lunch and break periods.
- Litter from work areas within the construction limits of the project site should be collected and placed in watertight dumpsters at least weekly, regardless of whether the litter was generated by the contractor, the public, or others. Collected litter and debris should not be placed in or next to drain inlets, stormwater drainage systems, or watercourses.
- Dumpsters of sufficient size and number should be provided to contain the solid waste generated by the project.
- Full dumpsters should be removed from the project site and the contents should be disposed of by the trash hauling contractor.
- Construction debris and waste should be removed from the site biweekly or more frequently as needed.
- Construction material visible to the public should be stored or stacked in an orderly manner.
- Stormwater runon should be prevented from contacting stored solid waste through the use of berms, dikes, or other temporary diversion structures or through the use of measures to elevate waste from site surfaces.
- Solid waste storage areas should be located at least 50 ft from drainage facilities and watercourses and should not be located in areas prone to flooding or ponding.
- Except during fair weather, construction and highway planting waste not stored in watertight dumpsters should be securely covered from wind and rain by covering the waste with tarps or plastic.
- Segregate potentially hazardous waste from non-hazardous construction site waste.
- Make sure that toxic liquid wastes (used oils, solvents, and paints) and chemicals (acids, pesticides, additives, curing compounds) are not disposed of in dumpsters designated for construction debris.

- For disposal of hazardous waste, see WM-6, Hazardous Waste Management. Have hazardous waste hauled to an appropriate disposal and/or recycling facility.
- Salvage or recycle useful vegetation debris, packaging and surplus building materials when practical. For example, trees and shrubs from land clearing can be used as a brush barrier, or converted into wood chips, then used as mulch on graded areas. Wood pallets, cardboard boxes, and construction scraps can also be recycled.

Costs

All of the above are low cost measures.

Inspection and Maintenance

- Inspect and verify that activity–based BMPs are in place prior to the commencement of associated activities. While activities associated with the BMP are under way, inspect weekly during the rainy season and of two-week intervals in the non-rainy season to verify continued BMP implementation.
- Inspect BMPs subject to non-stormwater discharge daily while non-stormwater discharges occur
- Inspect construction waste area regularly.
- Arrange for regular waste collection.

References

Processes, Procedures and Methods to Control Pollution Resulting from All Construction Activity, 430/9-73-007, USEPA, 1973.

Stormwater Quality Handbooks - Construction Site Best Management Practices (BMPs) Manual, State of California Department of Transportation (Caltrans), November 2000.

Stormwater Management for Construction Activities; Developing Pollution Prevention Plans and Best Management Practice, EPA 832-R-92005; USEPA, April 1992.

Hazardous Waste Management WM-6

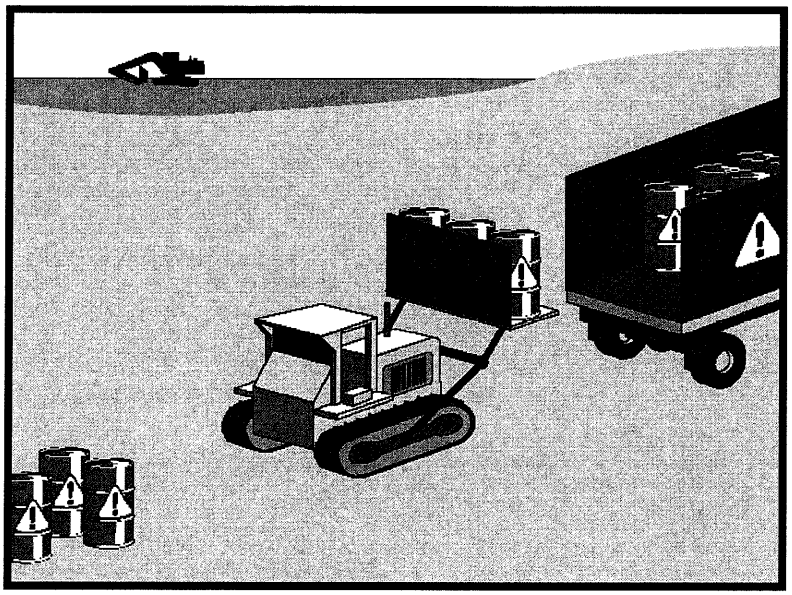

Objectives

EC	Erosion Control	
SE	Sediment Control	
TC	Tracking Control	
WE	Wind Erosion Control	
NS	Non-Stormwater Management Control	
WM	Waste Management and Materials Pollution Control	☑

Legend:

☑ **Primary Objective**

☒ **Secondary Objective**

Targeted Constituents

Sediment	
Nutrients	☑
Trash	☑
Metals	☑
Bacteria	☑
Oil and Grease	☑
Organics	☑

Potential Alternatives

None

Description and Purpose

Prevent or reduce the discharge of pollutants to stormwater from hazardous waste through proper material use, waste disposal, and training of employees and subcontractors.

Suitable Applications

This best management practice (BMP) applies to all construction projects. Hazardous waste management practices are implemented on construction projects that generate waste from the use of:

- Petroleum Products
- Asphalt Products
- Concrete Curing Compounds
- Pesticides
- Palliatives
- Acids
- Septic Wastes
- Paints
- Stains
- Solvents
- Wood Preservatives
- Roofing Tar
- Any materials deemed a hazardous waste in California, Title 22 Division 4.5, or listed in 40 CFR Parts 110, 117, 261, or 302

CASQA
CALIFORNIA STORMWATER QUALITY ASSOCIATION

In addition, sites with existing structures may contain wastes, which must be disposed of in accordance with federal, state, and local regulations. These wastes include:

- Sandblasting grit mixed with lead-, cadmium-, or chromium-based paints
- Asbestos
- PCBs (particularly in older transformers)

Limitations

- Hazardous waste that cannot be reused or recycled must be disposed of by a licensed hazardous waste hauler.
- Nothing in this BMP relieves the contractor from responsibility for compliance with federal, state, and local laws regarding storage, handling, transportation, and disposal of hazardous wastes.
- This BMP does not cover aerially deposited lead (ADL) soils. For ADL soils refer to WM-7, Contaminated Soil Management.

Implementation

The following steps will help reduce stormwater pollution from hazardous wastes:

Material Use

- Wastes should be stored in sealed containers constructed of a suitable material and should be labeled as required by Title 22 CCR, Division 4.5 and 49 CFR Parts 172, 173, 178, and 179.
- All hazardous waste should be stored, transported, and disposed as required in Title 22 CCR, Division 4.5 and 49 CFR 261-263.
- Waste containers should be stored in temporary containment facilities that should comply with the following requirements:
  - Temporary containment facility should provide for a spill containment volume equal to 1.5 times the volume of all containers able to contain precipitation from a 25 year storm event, plus the greater of 10% of the aggregate volume of all containers or 100% of the capacity of the largest tank within its boundary, whichever is greater.
  - Temporary containment facility should be impervious to the materials stored there for a minimum contact time of 72 hours.
  - Temporary containment facilities should be maintained free of accumulated rainwater and spills. In the event of spills or leaks, accumulated rainwater and spills should be placed into drums after each rainfall. These liquids should be handled as a hazardous waste unless testing determines them to be non-hazardous. Non-hazardous liquids should be sent to an approved disposal site.
  - Sufficient separation should be provided between stored containers to allow for spill cleanup and emergency response access.

- Incompatible materials, such as chlorine and ammonia, should not be stored in the same temporary containment facility.
- Throughout the rainy season, temporary containment facilities should be covered during non-working days, and prior to rain events. Covered facilities may include use of plastic tarps for small facilities or constructed roofs with overhangs.

- Drums should not be overfilled and wastes should not be mixed.
- Unless watertight, containers of dry waste should be stored on pallets.
- Do not over-apply herbicides and pesticides. Prepare only the amount needed. Follow the recommended usage instructions. Over application is expensive and environmentally harmful. Apply surface dressings in several smaller applications, as opposed to one large application. Allow time for infiltration and avoid excess material being carried offsite by runoff. Do not apply these chemicals just before it rains. People applying pesticides must be certified in accordance with federal and state regulations.
- Paint brushes and equipment for water and oil based paints should be cleaned within a contained area and should not be allowed to contaminate site soils, watercourses, or drainage systems. Waste paints, thinners, solvents, residues, and sludges that cannot be recycled or reused should be disposed of as hazardous waste. When thoroughly dry, latex paint and paint cans, used brushes, rags, absorbent materials, and drop cloths should be disposed of as solid waste.
- Do not clean out brushes or rinse paint containers into the dirt, street, gutter, storm drain, or stream. "Paint out" brushes as much as possible. Rinse water-based paints to the sanitary sewer. Filter and reuse thinners and solvents. Dispose of excess oil-based paints and sludge as hazardous waste.
- The following actions should be taken with respect to temporary contaminant:
  - Ensure that adequate hazardous waste storage volume is available.
  - Ensure that hazardous waste collection containers are conveniently located.
  - Designate hazardous waste storage areas onsite away from storm drains or watercourses and away from moving vehicles and equipment to prevent accidental spills.
  - Minimize production or generation of hazardous materials and hazardous waste on the job site.
  - Use containment berms in fueling and maintenance areas and where the potential for spills is high.
  - Segregate potentially hazardous waste from non-hazardous construction site debris.
  - Keep liquid or semi-liquid hazardous waste in appropriate containers (closed drums or similar) and under cover.

- Clearly label all hazardous waste containers with the waste being stored and the date of accumulation.
- Place hazardous waste containers in secondary containment.
- Do not allow potentially hazardous waste materials to accumulate on the ground.
- Do not mix wastes.
- Use all of the product before disposing of the container.
- Do not remove the original product label; it contains important safety and disposal information.

Waste Recycling Disposal

- Select designated hazardous waste collection areas onsite.
- Hazardous materials and wastes should be stored in covered containers and protected from vandalism.
- Place hazardous waste containers in secondary containment.
- Do not mix wastes, this can cause chemical reactions, making recycling impossible and complicating disposal.
- Recycle any useful materials such as used oil or water-based paint.
- Make sure that toxic liquid wastes (used oils, solvents, and paints) and chemicals (acids, pesticides, additives, curing compounds) are not disposed of in dumpsters designated for construction debris.
- Arrange for regular waste collection before containers overflow.
- Make sure that hazardous waste (e.g., excess oil-based paint and sludge) is collected, removed, and disposed of only at authorized disposal areas.

Disposal Procedures

- Waste should be disposed of by a licensed hazardous waste transporter at an authorized and licensed disposal facility or recycling facility utilizing properly completed Uniform Hazardous Waste Manifest forms.
- A Department of Health Services certified laboratory should sample waste to determine the appropriate disposal facility.
- Properly dispose of rainwater in secondary containment that may have mixed with hazardous waste.
- Attention is directed to "Hazardous Material", "Contaminated Material", and "Aerially Deposited Lead" of the contract documents regarding the handling and disposal of hazardous materials.

Education

- Educate employees and subcontractors on hazardous waste storage and disposal procedures.
- Educate employees and subcontractors on potential dangers to humans and the environment from hazardous wastes.
- Instruct employees and subcontractors on safety procedures for common construction site hazardous wastes.
- Instruct employees and subcontractors in identification of hazardous and solid waste.
- Hold regular meetings to discuss and reinforce hazardous waste management procedures (incorporate into regular safety meetings).
- The contractor's superintendent or representative should oversee and enforce proper hazardous waste management procedures and practices.
- Make sure that hazardous waste is collected, removed, and disposed of only at authorized disposal areas.
- Warning signs should be placed in areas recently treated with chemicals.
- Place a stockpile of spill cleanup materials where it will be readily accessible.
- If a container does spill, clean up immediately.

Costs

All of the above are low cost measures.

Inspection and Maintenance

- Inspect and verify that activity–based BMPs are in place prior to the commencement of associated activities. While activities associated with the BMP are under way, inspect weekly during the rainy season and of two week intervals in the non-rainy season to verify continued BMP implementation.
- Inspect BMPs subject to non-stormwater discharge daily while non-stormwater discharges occur
- Hazardous waste should be regularly collected.
- A foreman or construction supervisor should monitor onsite hazardous waste storage and disposal procedures.
- Waste storage areas should be kept clean, well organized, and equipped with ample cleanup supplies as appropriate for the materials being stored.
- Perimeter controls, containment structures, covers, and liners should be repaired or replaced as needed to maintain proper function.
- Hazardous spills should be cleaned up and reported in conformance with the applicable Material Safety Data Sheet (MSDS) and the instructions posted at the project site.

- The National Response Center, at (800) 424-8802, should be notified of spills of federal reportable quantities in conformance with the requirements in 40 CFR parts 110, 117, and 302. Also notify the Governors Office of Emergency Services Warning Center at (916) 845-8911.
- A copy of the hazardous waste manifests should be provided.

References

Blueprint for a Clean Bay: Best Management Practices to Prevent Stormwater Pollution from Construction Related Activities; Santa Clara Valley Nonpoint Source Pollution Control Program, 1995.

Processes, Procedures and Methods to Control Pollution Resulting from All Construction Activity, 430/9-73-007, USEPA, 1973.

Stormwater Quality Handbooks - Construction Site Best Management Practices (BMPs) Manual, State of California Department of Transportation (Caltrans), November 2000.

Stormwater Management for Construction Activities; Developing Pollution Prevention Plans and Best Management Practice, EPA 832-R-92005; USEPA, April 1992.

Contaminated Soil Management WM-7

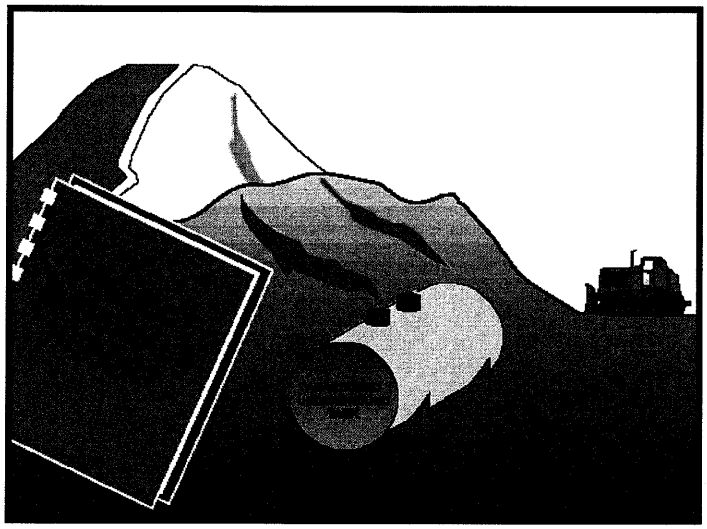

Objectives

EC	Erosion Control	
SE	Sediment Control	
TC	Tracking Control	
WE	Wind Erosion Control	
NS	Non-Stormwater Management Control	
WM	Waste Management and Materials Pollution Control	☑

Legend:

☑ **Primary Objective**

☒ **Secondary Objective**

Targeted Constituents

Sediment	
Nutrients	☑
Trash	☑
Metals	☑
Bacteria	☑
Oil and Grease	☑
Organics	☑

Potential Alternatives

None

Description and Purpose

Prevent or reduce the discharge of pollutants to stormwater from contaminated soil and highly acidic or alkaline soils by conducting pre-construction surveys, inspecting excavations regularly, and remediating contaminated soil promptly.

Suitable Applications

Contaminated soil management is implemented on construction projects in highly urbanized or industrial areas where soil contamination may have occurred due to spills, illicit discharges, aerial deposition, past use and leaks from underground storage tanks.

Limitations

Contaminated soils that cannot be treated onsite must be disposed of offsite by a licensed hazardous waste hauler. The presence of contaminated soil may indicate contaminated water as well. See NS-2, Dewatering Operations, for more information.

The procedures and practices presented in this BMP are general. The contractor should identify appropriate practices and procedures for the specific contaminants known to exist or discovered onsite.

Implementation

Most owners and developers conduct pre-construction environmental assessments as a matter of routine. Contaminated soils are often identified during project planning and development with known locations identified in the plans, specifications and in the SWPPP. The contractor should review applicable reports and investigate appropriate call-outs in the plans, specifications, and

CASQA
CALIFORNIA STORMWATER QUALITY ASSOCIATION

SWPPP. Recent court rulings holding contractors liable for cleanup costs when they unknowingly move contaminated soil highlight the need for contractors to confirm a site assessment is completed before earth moving begins.

The following steps will help reduce stormwater pollution from contaminated soil:

- Conduct thorough, pre-construction inspections of the site and review documents related to the site. If inspection or reviews indicated presence of contaminated soils, develop a plan before starting work.
- Look for contaminated soil as evidenced by discoloration, odors, differences in soil properties, abandoned underground tanks or pipes, or buried debris.
- Prevent leaks and spills. Contaminated soil can be expensive to treat and dispose of properly. However, addressing the problem before construction is much less expensive than after the structures are in place.
- The contractor may further identify contaminated soils by investigating:
  - Past site uses and activities
  - Detected or undetected spills and leaks
  - Acid or alkaline solutions from exposed soil or rock formations high in acid or alkaline forming elements
  - Contaminated soil as evidenced by discoloration, odors, differences in soil properties, abandoned underground tanks or pipes, or buried debris.
  - Suspected soils should be tested at a certified laboratory.

Education

- Have employees and subcontractors complete a safety training program which meets 29 CFR 1910.120 and 8 CCR 5192 covering the potential hazards as identified, prior to performing any excavation work at the locations containing material classified as hazardous.
- Educate employees and subcontractors in identification of contaminated soil and on contaminated soil handling and disposal procedures.
- Hold regular meetings to discuss and reinforce disposal procedures (incorporate into regular safety meetings).

Handling Procedures for Material with Aerially Deposited Lead (ADL)

- Materials from areas designated as containing (ADL) may, if allowed by the contract special provisions, be excavated, transported, and used in the construction of embankments and/or backfill.
- Excavation, transportation, and placement operations should result in no visible dust.
- Caution should be exercised to prevent spillage of lead containing material during transport.

- Quality should be monitored during excavation of soils contaminated with lead.

Handling Procedures for Contaminated Soils

- Minimize onsite storage. Contaminated soil should be disposed of properly in accordance with all applicable regulations. All hazardous waste storage will comply with the requirements in Title 22, CCR, Sections 66265.250 to 66265.260.
- Test suspected soils at an approved certified laboratory.
- Work with the local regulatory agencies to develop options for treatment or disposal if the soil is contaminated.
- Avoid temporary stockpiling of contaminated soils or hazardous material.
- Take the following precautions if temporary stockpiling is necessary:
  - Cover the stockpile with plastic sheeting or tarps.
  - Install a berm around the stockpile to prevent runoff from leaving the area.
  - Do not stockpile in or near storm drains or watercourses.
- Remove contaminated material and hazardous material on exteriors of transport vehicles and place either into the current transport vehicle or into the excavation prior to the vehicle leaving the exclusion zone.
- Monitor the air quality continuously during excavation operations at all locations containing hazardous material.
- Procure all permits and licenses, pay all charges and fees, and give all notices necessary and incident to the due and lawful prosecution of the work, including registration for transporting vehicles carrying the contaminated material and the hazardous material.
- Collect water from decontamination procedures and treat or dispose of it at an appropriate disposal site.
- Collect non-reusable protective equipment, once used by any personnel, and dispose of at an appropriate disposal site.
- Install temporary security fence to surround and secure the exclusion zone. Remove fencing when no longer needed.
- Excavate, transport, and dispose of contaminated material and hazardous material in accordance with the rules and regulations of the following agencies (the specifications of these agencies supersede the procedures outlined in this BMP):
  - United States Department of Transportation (USDOT)
  - United States Environmental Protection Agency (USEPA)
  - California Environmental Protection Agency (CAL-EPA)

- California Division of Occupation Safety and Health Administration (CAL-OSHA)
- Local regulatory agencies

Procedures for Underground Storage Tank Removals

- Prior to commencing tank removal operations, obtain the required underground storage tank removal permits and approval from the federal, state, and local agencies that have jurisdiction over such work.
- To determine if it contains hazardous substances, arrange to have tested, any liquid or sludge found in the underground tank prior to its removal.
- Following the tank removal, take soil samples beneath the excavated tank and perform analysis as required by the local agency representative(s).
- The underground storage tank, any liquid or sludge found within the tank, and all contaminated substances and hazardous substances removed during the tank removal and transported to disposal facilities permitted to accept such waste.

Water Control

- All necessary precautions and preventive measures should be taken to prevent the flow of water, including ground water, from mixing with hazardous substances or underground storage tank excavations. Such preventative measures may consist of, but are not limited to, berms, cofferdams, grout curtains, freeze walls, and seal course concrete or any combination thereof.
- If water does enter an excavation and becomes contaminated, such water, when necessary to proceed with the work, should be discharged to clean, closed top, watertight transportable holding tanks, treated, and disposed of in accordance with federal, state, and local laws.

Costs

Prevention of leaks and spills is inexpensive. Treatment or disposal of contaminated soil can be quite expensive.

Inspection and Maintenance

- Inspect and verify that activity–based BMPs are in place prior to the commencement of associated activities. While activities associated with the BMP are under way, inspect weekly during the rainy season and of two-week intervals in the non-rainy season to verify continued BMP implementation.
- Arrange for contractor's Water Pollution Control Manager, foreman, and/or construction supervisor to monitor onsite contaminated soil storage and disposal procedures.
- Monitor air quality continuously during excavation operations at all locations containing hazardous material.
- Coordinate contaminated soils and hazardous substances/waste management with the appropriate federal, state, and local agencies.

- Implement WM-4, Spill Prevention and Control, to prevent leaks and spills as much as possible.

References

Blueprint for a Clean Bay: Best Management Practices to Prevent Stormwater Pollution from Construction Related Activities; Santa Clara Valley Nonpoint Source Pollution Control Program, 1995.

Processes, Procedures and Methods to Control Pollution Resulting from All Construction Activity, 430/9-73-007, USEPA, 1973.

Stormwater Quality Handbooks - Construction Site Best Management Practices (BMPs) Manual, State of California Department of Transportation (Caltrans), November 2000.

Stormwater Management for Construction Activities; Developing Pollution Prevention Plans and Best Management Practice, EPA 832-R-92005; USEPA, April 1992.

Concrete Waste Management WM-8

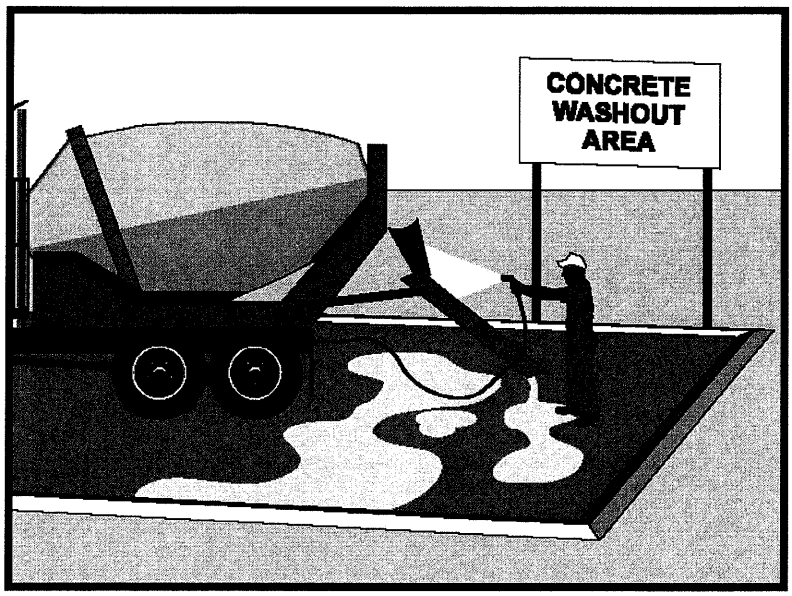

Objectives

EC	Erosion Control	
SE	Sediment Control	
TC	Tracking Control	
WE	Wind Erosion Control	
NS	Non-Stormwater Management Control	
WM	Waste Management and Materials Pollution Control	☑

Legend:

☑ **Primary Objective**

☒ **Secondary Objective**

Targeted Constituents

Sediment	☑
Nutrients	
Trash	
Metals	☑
Bacteria	
Oil and Grease	
Organics	

Potential Alternatives

None

Description and Purpose

Prevent or reduce the discharge of pollutants to stormwater from concrete waste by conducting washout offsite, performing onsite washout in a designated area, and training employee and subcontractors.

Suitable Applications

Concrete waste management procedures and practices are implemented on construction projects where:

- Concrete is used as a construction material or where concrete dust and debris result form demolition activities
- Slurries containing portland cement concrete (PCC) or asphalt concrete (AC) are generated, such as from saw cutting, coring, grinding, grooving, and hydro-concrete demolition
- Concrete trucks and other concrete-coated equipment are washed onsite
- Mortar-mixing stations exist
- See also NS-8, Vehicle and Equipment Cleaning

Limitations

- Offsite washout of concrete wastes may not always be possible.

CASQA
CALIFORNIA STORMWATER QUALITY ASSOCIATION

Implementation

The following steps will help reduce stormwater pollution from concrete wastes:

- Discuss the concrete management techniques described in this BMP (such as handling of concrete waste and washout) with the ready-mix concrete supplier before any deliveries are made.
- Incorporate requirements for concrete waste management into material supplier and subcontractor agreements.
- Store dry and wet materials under cover, away from drainage areas.
- Avoid mixing excess amounts of fresh concrete.
- Perform washout of concrete trucks offsite or in designated areas only.
- Do not wash out concrete trucks into storm drains, open ditches, streets, or streams.
- Do not allow excess concrete to be dumped onsite, except in designated areas.
- For onsite washout:
  - Locate washout area at least 50 feet from storm drains, open ditches, or water bodies. Do not allow runoff from this area by constructing a temporary pit or bermed area large enough for liquid and solid waste.
  - Wash out wastes into the temporary pit where the concrete can set, be broken up, and then disposed properly.
- Avoid creating runoff by draining water to a bermed or level area when washing concrete to remove fine particles and expose the aggregate.
- Do not wash sweepings from exposed aggregate concrete into the street or storm drain. Collect and return sweepings to aggregate base stockpile or dispose in the trash.

Education

- Educate employees, subcontractors, and suppliers on the concrete waste management techniques described herein.
- Arrange for contractor's superintendent or representative to oversee and enforce concrete waste management procedures.

Concrete Slurry Wastes

- PCC and AC waste should not be allowed to enter storm drains or watercourses.
- PCC and AC waste should be collected and disposed of or placed in a temporary concrete washout facility.
- A sign should be installed adjacent to each temporary concrete washout facility to inform concrete equipment operators to utilize the proper facilities.

- Below grade concrete washout facilities are typical. Above grade facilities are used if excavation is not practical.
- A foreman or construction supervisor should monitor onsite concrete working tasks, such as saw cutting, coring, grinding and grooving to ensure proper methods are implemented.
- Saw-cut PCC slurry should not be allowed to enter storm drains or watercourses. Residue from grinding operations should be picked up by means of a vacuum attachment to the grinding machine. Saw cutting residue should not be allowed to flow across the pavement and should not be left on the surface of the pavement. See also NS-3, Paving and Grinding Operations; and WM-10, Liquid Waste Management.
- Slurry residue should be vacuumed and disposed in a temporary pit (as described in OnSite Temporary Concrete Washout Facility, Concrete Transit Truck Washout Procedures, below) and allowed to dry. Dispose of dry slurry residue in accordance with WM-5, Solid Waste Management.

Onsite Temporary Concrete Washout Facility, Transit Truck Washout Procedures

- Temporary concrete washout facilities should be located a minimum of 50 ft from storm drain inlets, open drainage facilities, and watercourses. Each facility should be located away from construction traffic or access areas to prevent disturbance or tracking.
- A sign should be installed adjacent to each washout facility to inform concrete equipment operators to utilize the proper facilities.
- Temporary concrete washout facilities should be constructed above grade or below grade at the option of the contractor. Temporary concrete washout facilities should be constructed and maintained in sufficient quantity and size to contain all liquid and concrete waste generated by washout operations.
- Temporary washout facilities should have a temporary pit or bermed areas of sufficient volume to completely contain all liquid and waste concrete materials generated during washout procedures.
- Washout of concrete trucks should be performed in designated areas only.
- Only concrete from mixer truck chutes should be washed into concrete wash out.
- Concrete washout from concrete pumper bins can be washed into concrete pumper trucks and discharged into designated washout area or properly disposed of offsite.
- Once concrete wastes are washed into the designated area and allowed to harden, the concrete should be broken up, removed, and disposed of per WM-5, Solid Waste Management. Dispose of hardened concrete on a regular basis.
- Temporary Concrete Washout Facility (Type Above Grade)
  - Temporary concrete washout facility (type above grade) should be constructed as shown on the details at the end of this BMP, with a recommended minimum length and

minimum width of 10 ft, but with sufficient quantity and volume to contain all liquid and concrete waste generated by washout operations.

- Straw bales, wood stakes, and sandbag materials should conform to the provisions in SE-9, Straw Bale Barrier.
- Plastic lining material should be a minimum of 10 mil in polyethylene sheeting and should be free of holes, tears, or other defects that compromise the impermeability of the material.

- Temporary Concrete Washout Facility (Type Below Grade)
  - Temporary concrete washout facilities (type below grade) should be constructed as shown on the details at the end of this BMP, with a recommended minimum length and minimum width of 10 ft. The quantity and volume should be sufficient to contain all liquid and concrete waste generated by washout operations.
  - Lath and flagging should be commercial type.
  - Plastic lining material should be a minimum of 10 mil polyethylene sheeting and should be free of holes, tears, or other defects that compromise the impermeability of the material.

Removal of Temporary Concrete Washout Facilities

- When temporary concrete washout facilities are no longer required for the work, the hardened concrete should be removed and disposed of. Materials used to construct temporary concrete washout facilities should be removed from the site of the work and disposed of.
- Holes, depressions or other ground disturbance caused by the removal of the temporary concrete washout facilities should be backfilled and repaired.

Costs

All of the above are low cost measures.

Inspection and Maintenance

- Inspect and verify that activity–based BMPs are in place prior to the commencement of associated activities. While activities associated with the BMP are under way, inspect weekly during the rainy season and of two-week intervals in the non-rainy season to verify continued BMP implementation.
- Temporary concrete washout facilities should be maintained to provide adequate holding capacity with a minimum freeboard of 4 in. for above grade facilities and 12 in. for below grade facilities. Maintaining temporary concrete washout facilities should include removing and disposing of hardened concrete and returning the facilities to a functional condition. Hardened concrete materials should be removed and disposed of.
- Washout facilities must be cleaned, or new facilities must be constructed and ready for use once the washout is 75% full.

References

Blueprint for a Clean Bay: Best Management Practices to Prevent Stormwater Pollution from Construction Related Activities; Santa Clara Valley Nonpoint Source Pollution Control Program, 1995.

Stormwater Quality Handbooks - Construction Site Best Management Practices (BMPs) Manual, State of California Department of Transportation (Caltrans), November 2000.

Stormwater Management for Construction Activities; Developing Pollution Prevention Plans and Best Management Practice, EPA 832-R-92005; USEPA, April 1992.

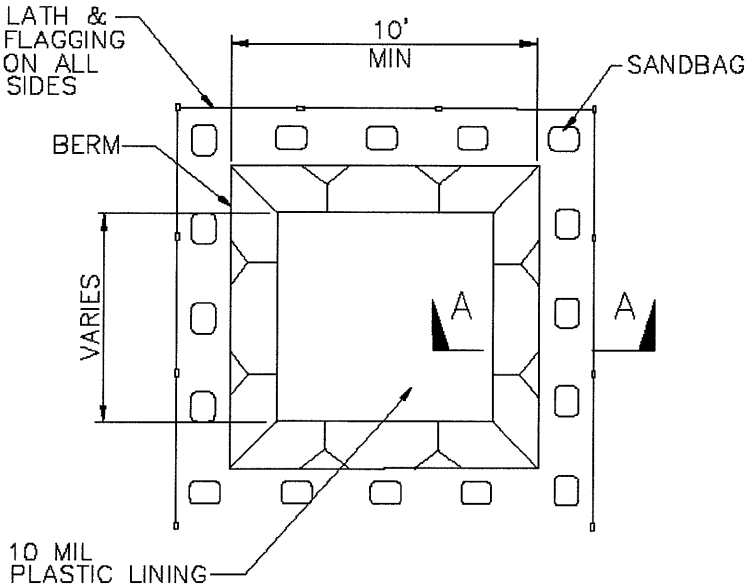

PLAN
NOT TO SCALE
TYPE "BELOW GRADE"

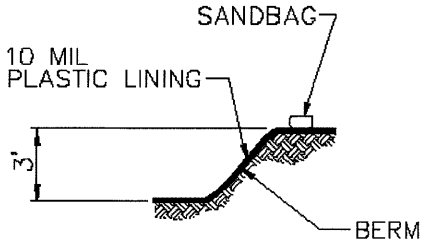

SECTION A–A
NOT TO SCALE

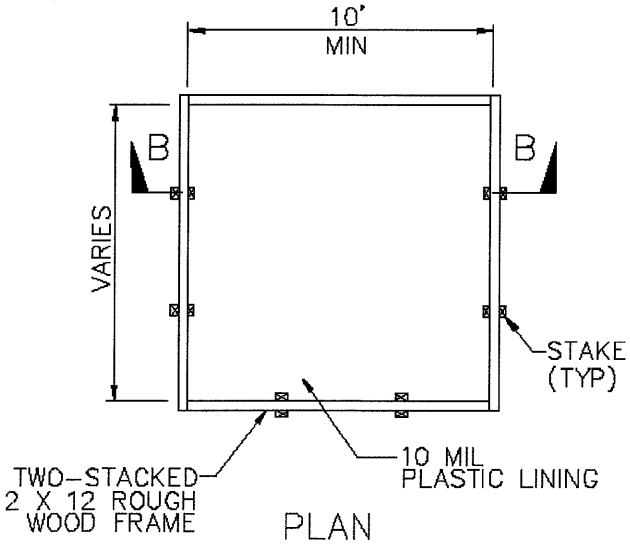

PLAN
NOT TO SCALE
TYPE "ABOVE GRADE"

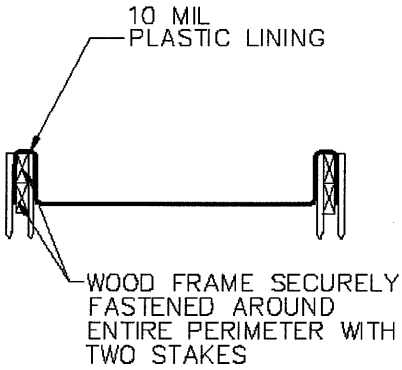

SECTION B–B
NOT TO SCALE

NOTES

1. ACTUAL LAYOUT DETERMINED IN FIELD.
2. THE CONCRETE WASHOUT SIGN SHALL BE INSTALLED WITHIN 30 FT. OF THE TEMPORARY CONCRETE WASHOUT FACILITY.

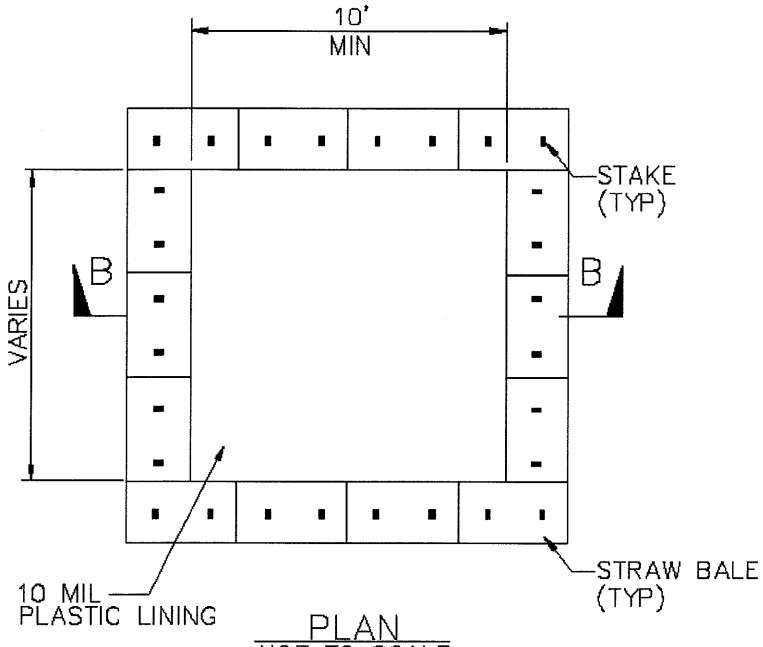

PLAN
NOT TO SCALE
TYPE "ABOVE GRADE"
WITH STRAW BALES

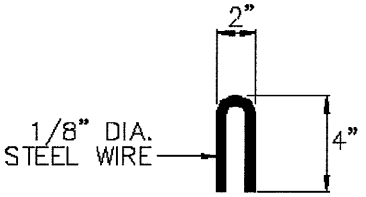

STAPLE DETAIL

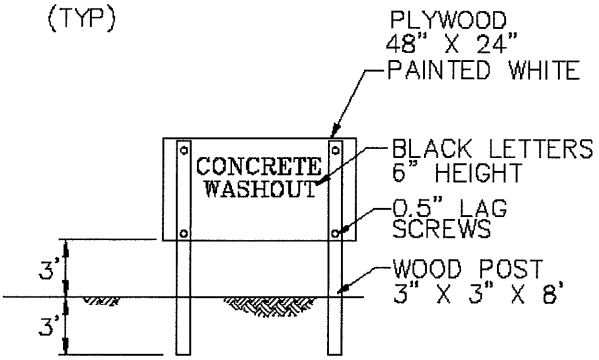

CONCRETE WASHOUT
SIGN DETAIL
(OR EQUIVALENT)

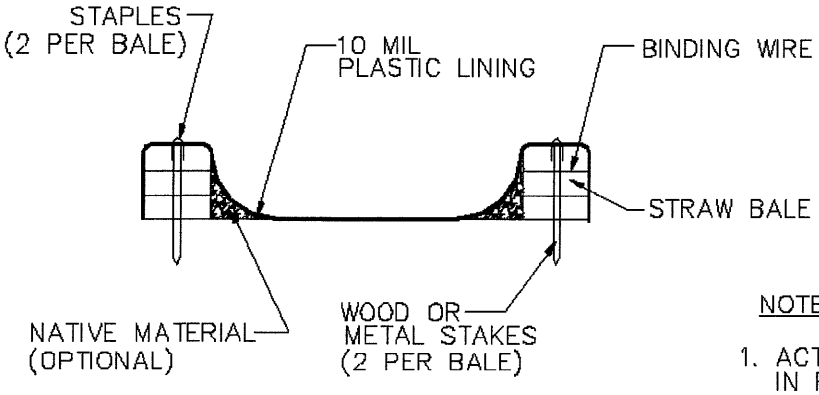

SECTION B–B
NOT TO SCALE

NOTES

1. ACTUAL LAYOUT DETERMINED IN FIELD.
2. THE CONCRETE WASHOUT SIGN SHALL BE INSTALLED WITHIN 30 FT. OF THE TEMPORARY CONCRETE WASHOUT FACILITY.

Sanitary/Septic Waste Management WM-9

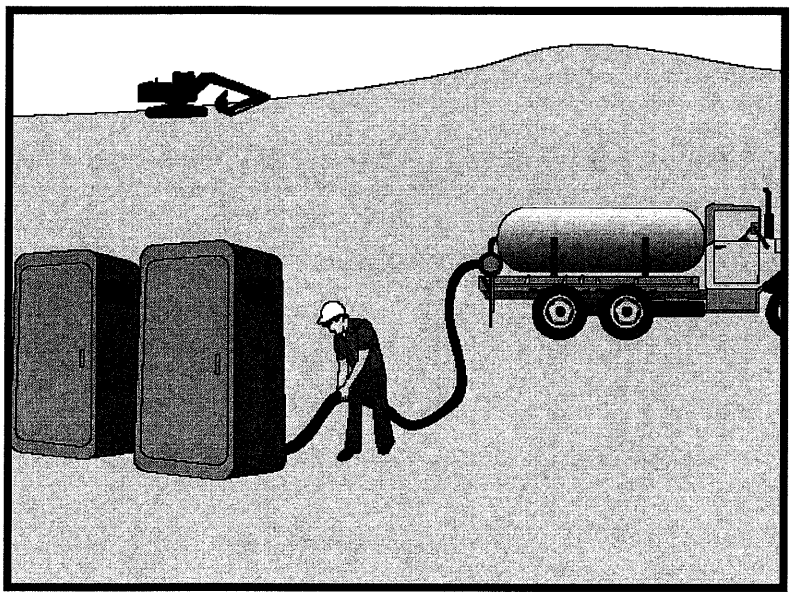

Objectives

EC	Erosion Control	
SE	Sediment Control	
TC	Tracking Control	
WE	Wind Erosion Control	
NS	Non-Stormwater Management Control	
WM	Waste Management and Materials Pollution Control	☑

Legend:

☑ **Primary Objective**

☒ **Secondary Objective**

Targeted Constituents

Sediment	
Nutrients	☑
Trash	☑
Metals	
Bacteria	☑
Oil and Grease	
Organics	☑

Potential Alternatives

None

Description and Purpose

Proper sanitary and septic waste management prevent the discharge of pollutants to stormwater from sanitary and septic waste by providing convenient, well-maintained facilities, and arranging for regular service and disposal.

Suitable Applications

Sanitary septic waste management practices are suitable for use at all construction sites that use temporary or portable sanitary and septic waste systems.

Limitations

None identified.

Implementation

Sanitary or septic wastes should be treated or disposed of in accordance with state and local requirements. In many cases, one contract with a local facility supplier will be all that it takes to make sure sanitary wastes are properly disposed.

Storage and Disposal Procedures

- Temporary sanitary facilities should be located away from drainage facilities, watercourses, and from traffic circulation. When subjected to high winds or risk of high winds, temporary sanitary facilities should be secured to prevent overturning.
- Wastewater should not be discharged or buried within the project site.

CASQA
CALIFORNIA STORMWATER QUALITY ASSOCIATION

WM-9 Sanitary/Septic Waste Management

- Sanitary and septic systems that discharge directly into sanitary sewer systems, where permissible, should comply with the local health agency, city, county, and sewer district requirements.
- Only reputable, licensed sanitary and septic waste haulers should be used.
- Sanitary facilities should be located in a convenient location.
- Untreated raw wastewater should never be discharged or buried.
- Temporary septic systems should treat wastes to appropriate levels before discharging.
- If using an onsite disposal system (OSDS), such as a septic system, local health agency requirements must be followed.
- Temporary sanitary facilities that discharge to the sanitary sewer system should be properly connected to avoid illicit discharges.
- Sanitary and septic facilities should be maintained in good working order by a licensed service.
- Regular waste collection by a licensed hauler should be arranged before facilities overflow.

Education

- Educate employees, subcontractors, and suppliers on sanitary and septic waste storage and disposal procedures.
- Educate employees, subcontractors, and suppliers of potential dangers to humans and the environment from sanitary and septic wastes.
- Instruct employees, subcontractors, and suppliers in identification of sanitary and septic waste.
- Hold regular meetings to discuss and reinforce disposal procedures (incorporate into regular safety meetings).
- Establish a continuing education program to indoctrinate new employees.

Costs

All of the above are low cost measures.

Inspection and Maintenance

- Inspect and verify that activity–based BMPs are in place prior to the commencement of associated activities. While activities associated with the BMP are under way, inspect weekly during the rainy season and of two-week intervals in the non-rainy season to verify continued BMP implementation.
- Arrange for regular waste collection.
- If high winds are expected, portable sanitary facilities must be secured with spikes or weighed down to prevent over turning.

References

Stormwater Quality Handbooks - Construction Site Best Management Practices (BMPs) Manual, State of California Department of Transportation (Caltrans), November 2000.

Stormwater Management for Construction Activities; Developing Pollution Prevention Plans and Best Management Practice, EPA 832-R-92005; USEPA, April 1992.

Site Design & Landscape Planning SD-10

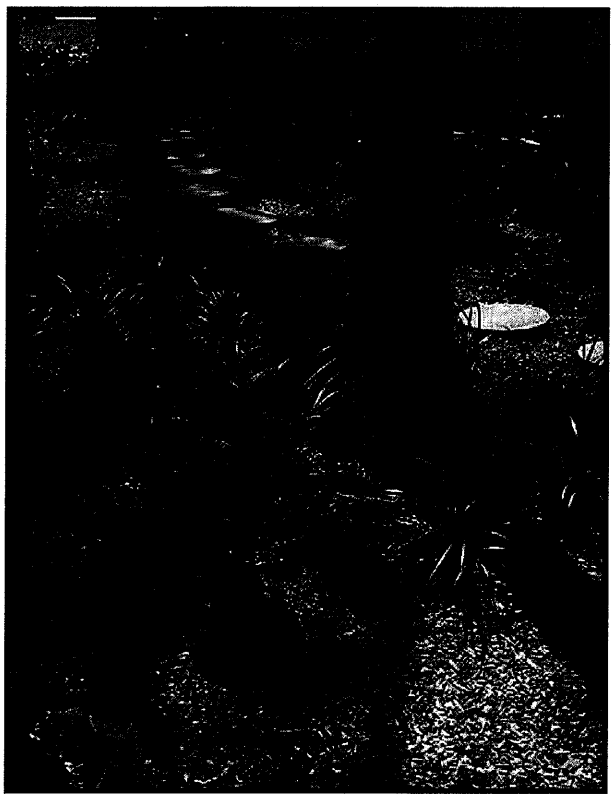

Design Objectives

- ☑ Maximize Infiltration
- ☑ Provide Retention
- ☑ Slow Runoff
- ☑ Minimize Impervious Land Coverage
- Prohibit Dumping of Improper Materials
- Contain Pollutants
- Collect and Convey

Description

Each project site possesses unique topographic, hydrologic, and vegetative features, some of which are more suitable for development than others. Integrating and incorporating appropriate landscape planning methodologies into the project design is the most effective action that can be done to minimize surface and groundwater contamination from stormwater.

Approach

Landscape planning should couple consideration of land suitability for urban uses with consideration of community goals and projected growth. Project plan designs should conserve natural areas to the extent possible, maximize natural water storage and infiltration opportunities, and protect slopes and channels.

Suitable Applications

Appropriate applications include residential, commercial and industrial areas planned for development or redevelopment.

Design Considerations

Design requirements for site design and landscapes planning should conform to applicable standards and specifications of agencies with jurisdiction and be consistent with applicable General Plan and Local Area Plan policies.

CASQA
CALIFORNIA STORMWATER QUALITY ASSOCIATION

SD-10 Site Design & Landscape Planning

Designing New Installations

Begin the development of a plan for the landscape unit with attention to the following general principles:

- Formulate the plan on the basis of clearly articulated community goals. Carefully identify conflicts and choices between retaining and protecting desired resources and community growth.

- Map and assess land suitability for urban uses. Include the following landscape features in the assessment: wooded land, open unwooded land, steep slopes, erosion-prone soils, foundation suitability, soil suitability for waste disposal, aquifers, aquifer recharge areas, wetlands, floodplains, surface waters, agricultural lands, and various categories of urban land use. When appropriate, the assessment can highlight outstanding local or regional resources that the community determines should be protected (e.g., a scenic area, recreational area, threatened species habitat, farmland, fish run). Mapping and assessment should recognize not only these resources but also additional areas needed for their sustenance.

Project plan designs should conserve natural areas to the extent possible, maximize natural water storage and infiltration opportunities, and protect slopes and channels.

Conserve Natural Areas during Landscape Planning

If applicable, the following items are required and must be implemented in the site layout during the subdivision design and approval process, consistent with applicable General Plan and Local Area Plan policies:

- Cluster development on least-sensitive portions of a site while leaving the remaining land in a natural undisturbed condition.

- Limit clearing and grading of native vegetation at a site to the minimum amount needed to build lots, allow access, and provide fire protection.

- Maximize trees and other vegetation at each site by planting additional vegetation, clustering tree areas, and promoting the use of native and/or drought tolerant plants.

- Promote natural vegetation by using parking lot islands and other landscaped areas.

- Preserve riparian areas and wetlands.

Maximize Natural Water Storage and Infiltration Opportunities Within the Landscape Unit

- Promote the conservation of forest cover. Building on land that is already deforested affects basin hydrology to a lesser extent than converting forested land. Loss of forest cover reduces interception storage, detention in the organic forest floor layer, and water losses by evapotranspiration, resulting in large peak runoff increases and either their negative effects or the expense of countering them with structural solutions.

- Maintain natural storage reservoirs and drainage corridors, including depressions, areas of permeable soils, swales, and intermittent streams. Develop and implement policies and

regulations to discourage the clearing, filling, and channelization of these features. Utilize them in drainage networks in preference to pipes, culverts, and engineered ditches.

- Evaluating infiltration opportunities by referring to the stormwater management manual for the jurisdiction and pay particular attention to the selection criteria for avoiding groundwater contamination, poor soils, and hydrogeological conditions that cause these facilities to fail. If necessary, locate developments with large amounts of impervious surfaces or a potential to produce relatively contaminated runoff away from groundwater recharge areas.

Protection of Slopes and Channels during Landscape Design

- Convey runoff safely from the tops of slopes.
- Avoid disturbing steep or unstable slopes.
- Avoid disturbing natural channels.
- Stabilize disturbed slopes as quickly as possible.
- Vegetate slopes with native or drought tolerant vegetation.
- Control and treat flows in landscaping and/or other controls prior to reaching existing natural drainage systems.
- Stabilize temporary and permanent channel crossings as quickly as possible, and ensure that increases in run-off velocity and frequency caused by the project do not erode the channel.
- Install energy dissipaters, such as riprap, at the outlets of new storm drains, culverts, conduits, or channels that enter unlined channels in accordance with applicable specifications to minimize erosion. Energy dissipaters shall be installed in such a way as to minimize impacts to receiving waters.
- Line on-site conveyance channels where appropriate, to reduce erosion caused by increased flow velocity due to increases in tributary impervious area. The first choice for linings should be grass or some other vegetative surface, since these materials not only reduce runoff velocities, but also provide water quality benefits from filtration and infiltration. If velocities in the channel are high enough to erode grass or other vegetative linings, riprap, concrete, soil cement, or geo-grid stabilization are other alternatives.
- Consider other design principles that are comparable and equally effective.

Redeveloping Existing Installations

Various jurisdictional stormwater management and mitigation plans (SUSMP, WQMP, etc.) define "redevelopment" in terms of amounts of additional impervious area, increases in gross floor area and/or exterior construction, and land disturbing activities with structural or impervious surfaces. The definition of " redevelopment" must be consulted to determine whether or not the requirements for new development apply to areas intended for redevelopment. If the definition applies, the steps outlined under "designing new installations" above should be followed.

SD-10 Site Design & Landscape Planning

Redevelopment may present significant opportunity to add features which had not previously been implemented. Examples include incorporation of depressions, areas of permeable soils, and swales in newly redeveloped areas. While some site constraints may exist due to the status of already existing infrastructure, opportunities should not be missed to maximize infiltration, slow runoff, reduce impervious areas, disconnect directly connected impervious areas.

Other Resources

A Manual for the Standard Urban Stormwater Mitigation Plan (SUSMP), Los Angeles County Department of Public Works, May 2002.

Stormwater Management Manual for Western Washington, Washington State Department of Ecology, August 2001.

Model Standard Urban Storm Water Mitigation Plan (SUSMP) for San Diego County, Port of San Diego, and Cities in San Diego County, February 14, 2002.

Model Water Quality Management Plan (WQMP) for County of Orange, Orange County Flood Control District, and the Incorporated Cities of Orange County, Draft February 2003.

Ventura Countywide Technical Guidance Manual for Stormwater Quality Control Measures, July 2002.

Roof Runoff Controls SD-11

Rain Garden

Design Objectives

- ☑ Maximize Infiltration
- ☑ Provide Retention
- ☑ Slow Runoff
- Minimize Impervious Land Coverage
- Prohibit Dumping of Improper Materials
- ☑ Contain Pollutants
- Collect and Convey

Description

Various roof runoff controls are available to address stormwater that drains off rooftops. The objective is to reduce the total volume and rate of runoff from individual lots, and retain the pollutants on site that may be picked up from roofing materials and atmospheric deposition. Roof runoff controls consist of directing the roof runoff away from paved areas and mitigating flow to the storm drain system through one of several general approaches: cisterns or rain barrels; dry wells or infiltration trenches; pop-up emitters, and foundation planting. The first three approaches require the roof runoff to be contained in a gutter and downspout system. Foundation planting provides a vegetated strip under the drip line of the roof.

Approach

Design of individual lots for single-family homes as well as lots for higher density residential and commercial structures should consider site design provisions for containing and infiltrating roof runoff or directing roof runoff to vegetative swales or buffer areas. Retained water can be reused for watering gardens, lawns, and trees. Benefits to the environment include reduced demand for potable water used for irrigation, improved stormwater quality, increased groundwater recharge, decreased runoff volume and peak flows, and decreased flooding potential.

Suitable Applications

Appropriate applications include residential, commercial and industrial areas planned for development or redevelopment.

Design Considerations

Designing New Installations

Cisterns or Rain Barrels

One method of addressing roof runoff is to direct roof downspouts to cisterns or rain barrels. A cistern is an above ground storage vessel with either a manually operated valve or a permanently open outlet. Roof runoff is temporarily stored and then released for irrigation or infiltration between storms. The number of rain

CASQA
CALIFORNIA STORMWATER QUALITY ASSOCIATION

barrels needed is a function of the rooftop area. Some low impact developers recommend that every house have at least 2 rain barrels, with a minimum storage capacity of 1000 liters. Roof barrels serve several purposes including mitigating the first flush from the roof which has a high volume, amount of contaminants, and thermal load. Several types of rain barrels are commercially available. Consideration must be given to selecting rain barrels that are vector proof and childproof. In addition, some barrels are designed with a bypass valve that filters out grit and other contaminants and routes overflow to a soak-away pit or rain garden.

If the cistern has an operable valve, the valve can be closed to store stormwater for irrigation or infiltration between storms. This system requires continual monitoring by the resident or grounds crews, but provides greater flexibility in water storage and metering. If a cistern is provided with an operable valve and water is stored inside for long periods, the cistern must be covered to prevent mosquitoes from breeding.

A cistern system with a permanently open outlet can also provide for metering stormwater runoff. If the cistern outlet is significantly smaller than the size of the downspout inlet (say ¼ to ½ inch diameter), runoff will build up inside the cistern during storms, and will empty out slowly after peak intensities subside. This is a feasible way to mitigate the peak flow increases caused by rooftop impervious land coverage, especially for the frequent, small storms.

Dry wells and Infiltration Trenches

Roof downspouts can be directed to dry wells or infiltration trenches. A dry well is constructed by excavating a hole in the ground and filling it with an open graded aggregate, and allowing the water to fill the dry well and infiltrate after the storm event. An underground connection from the downspout conveys water into the dry well, allowing it to be stored in the voids. To minimize sedimentation from lateral soil movement, the sides and top of the stone storage matrix can be wrapped in a permeable filter fabric, though the bottom may remain open. A perforated observation pipe can be inserted vertically into the dry well to allow for inspection and maintenance.

In practice, dry wells receiving runoff from single roof downspouts have been successful over long periods because they contain very little sediment. They must be sized according to the amount of rooftop runoff received, but are typically 4 to 5 feet square, and 2 to 3 feet deep, with a minimum of 1-foot soil cover over the top (maximum depth of 10 feet).

To protect the foundation, dry wells must be set away from the building at least 10 feet. They must be installed in solids that accommodate infiltration. In poorly drained soils, dry wells have very limited feasibility.

Infiltration trenches function in a similar manner and would be particularly effective for larger roof areas. An infiltration trench is a long, narrow, rock-filled trench with no outlet that receives stormwater runoff. These are described under Treatment Controls.

Pop-up Drainage Emitter

Roof downspouts can be directed to an underground pipe that daylights some distance from the building foundation, releasing the roof runoff through a pop-up emitter. Similar to a pop-up irrigation head, the emitter only opens when there is flow from the roof. The emitter remains flush to the ground during dry periods, for ease of lawn or landscape maintenance.

Foundation Planting

Landscape planting can be provided around the base to allow increased opportunities for stormwater infiltration and protect the soil from erosion caused by concentrated sheet flow coming off the roof. Foundation plantings can reduce the physical impact of water on the soil and provide a subsurface matrix of roots that encourage infiltration. These plantings must be sturdy enough to tolerate the heavy runoff sheet flows, and periodic soil saturation.

Redeveloping Existing Installations

Various jurisdictional stormwater management and mitigation plans (SUSMP, WQMP, etc.) define "redevelopment" in terms of amounts of additional impervious area, increases in gross floor area and/or exterior construction, and land disturbing activities with structural or impervious surfaces. The definition of " redevelopment" must be consulted to determine whether or not the requirements for new development apply to areas intended for redevelopment. If the definition applies, the steps outlined under "designing new installations" above should be followed.

Supplemental Information

Examples

- City of Ottawa's Water Links Surface –Water Quality Protection Program
- City of Toronto Downspout Disconnection Program
- City of Boston, MA, Rain Barrel Demonstration Program

Other Resources

Hager, Marty Catherine, Stormwater, "Low-Impact Development", January/February 2003. www.stormh2o.com

Low Impact Urban Design Tools, Low Impact Development Design Center, Beltsville, MD. www.lid-stormwater.net

Start at the Source, Bay Area Stormwater Management Agencies Association, 1999 Edition

Efficient Irrigation SD-12

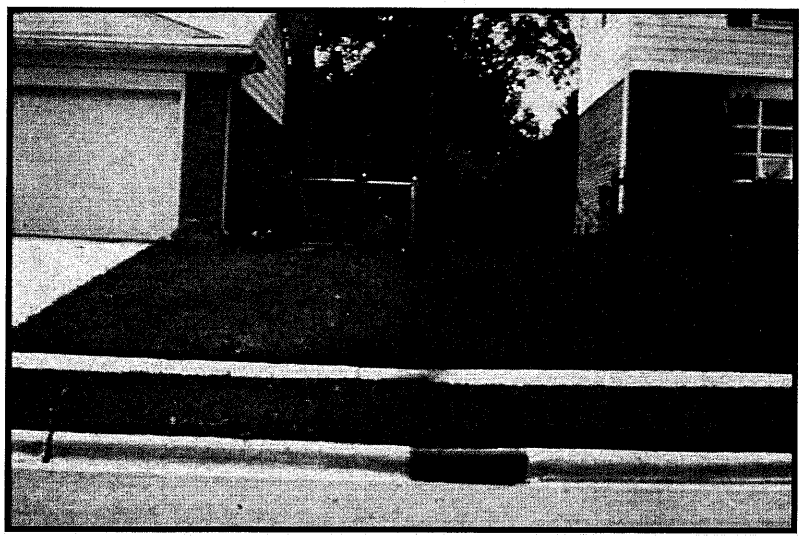

Design Objectives

- ☑ Maximize Infiltration
- ☑ Provide Retention
- ☑ Slow Runoff
- Minimize Impervious Land Coverage
- Prohibit Dumping of Improper Materials
- Contain Pollutants
- Collect and Convey

Description

Irrigation water provided to landscaped areas may result in excess irrigation water being conveyed into stormwater drainage systems.

Approach

Project plan designs for development and redevelopment should include application methods of irrigation water that minimize runoff of excess irrigation water into the stormwater conveyance system.

Suitable Applications

Appropriate applications include residential, commercial and industrial areas planned for development or redevelopment. (Detached residential single-family homes are typically excluded from this requirement.)

Design Considerations

Designing New Installations

The following methods to reduce excessive irrigation runoff should be considered, and incorporated and implemented where determined applicable and feasible by the Permittee:

- Employ rain-triggered shutoff devices to prevent irrigation after precipitation.
- Design irrigation systems to each landscape area's specific water requirements.
- Include design featuring flow reducers or shutoff valves triggered by a pressure drop to control water loss in the event of broken sprinkler heads or lines.
- Implement landscape plans consistent with County or City water conservation resolutions, which may include provision of water sensors, programmable irrigation times (for short cycles), etc.

CASQA
CALIFORNIA STORMWATER QUALITY ASSOCIATION

- Design timing and application methods of irrigation water to minimize the runoff of excess irrigation water into the storm water drainage system.
- Group plants with similar water requirements in order to reduce excess irrigation runoff and promote surface filtration. Choose plants with low irrigation requirements (for example, native or drought tolerant species). Consider design features such as:
  - Using mulches (such as wood chips or bar) in planter areas without ground cover to minimize sediment in runoff
  - Installing appropriate plant materials for the location, in accordance with amount of sunlight and climate, and use native plant materials where possible and/or as recommended by the landscape architect
  - Leaving a vegetative barrier along the property boundary and interior watercourses, to act as a pollutant filter, where appropriate and feasible
  - Choosing plants that minimize or eliminate the use of fertilizer or pesticides to sustain growth
- Employ other comparable, equally effective methods to reduce irrigation water runoff.

Redeveloping Existing Installations

Various jurisdictional stormwater management and mitigation plans (SUSMP, WQMP, etc.) define "redevelopment" in terms of amounts of additional impervious area, increases in gross floor area and/or exterior construction, and land disturbing activities with structural or impervious surfaces. The definition of " redevelopment" must be consulted to determine whether or not the requirements for new development apply to areas intended for redevelopment. If the definition applies, the steps outlined under "designing new installations" above should be followed.

Other Resources

A Manual for the Standard Urban Stormwater Mitigation Plan (SUSMP), Los Angeles County Department of Public Works, May 2002.

Model Standard Urban Storm Water Mitigation Plan (SUSMP) for San Diego County, Port of San Diego, and Cities in San Diego County, February 14, 2002.

Model Water Quality Management Plan (WQMP) for County of Orange, Orange County Flood Control District, and the Incorporated Cities of Orange County, Draft February 2003.

Ventura Countywide Technical Guidance Manual for Stormwater Quality Control Measures, July 2002.

Trash Storage Areas SD-32

Design Objectives

- Maximize Infiltration
- Provide Retention
- Slow Runoff
- Minimize Impervious Land Coverage
- Prohibit Dumping of Improper Materials
- ☑ Contain Pollutants
- Collect and Convey

Description

Trash storage areas are areas where a trash receptacle (s) are located for use as a repository for solid wastes. Stormwater runoff from areas where trash is stored or disposed of can be polluted. In addition, loose trash and debris can be easily transported by water or wind into nearby storm drain inlets, channels, and/or creeks. Waste handling operations that may be sources of stormwater pollution include dumpsters, litter control, and waste piles.

Approach

This fact sheet contains details on the specific measures required to prevent or reduce pollutants in stormwater runoff associated with trash storage and handling. Preventative measures including enclosures, containment structures, and impervious pavements to mitigate spills, should be used to reduce the likelihood of contamination.

Suitable Applications

Appropriate applications include residential, commercial and industrial areas planned for development or redevelopment. (Detached residential single-family homes are typically excluded from this requirement.)

Design Considerations

Design requirements for waste handling areas are governed by Building and Fire Codes, and by current local agency ordinances and zoning requirements. The design criteria described in this fact sheet are meant to enhance and be consistent with these code and ordinance requirements. Hazardous waste should be handled in accordance with legal requirements established in Title 22, California Code of Regulation.

Wastes from commercial and industrial sites are typically hauled by either public or commercial carriers that may have design or access requirements for waste storage areas. The design criteria in this fact sheet are recommendations and are not intended to be in conflict with requirements established by the waste hauler. The waste hauler should be contacted prior to the design of your site trash collection areas. Conflicts or issues should be discussed with the local agency.

Designing New Installations

Trash storage areas should be designed to consider the following structural or treatment control BMPs:

- Design trash container areas so that drainage from adjoining roofs and pavement is diverted around the area(s) to avoid run-on. This might include berming or grading the waste handling area to prevent run-on of stormwater.
- Make sure trash container areas are screened or walled to prevent off-site transport of trash.

CASQA
CALIFORNIA STORMWATER QUALITY ASSOCIATION

San Bernardino City Unified School District
Roosevelt II (Henry) Elementary School
New Elementary School Construction Project (Bid # F09-02 RE-BID)
Storm Water Pollution Prevention Plan
02200
Bid Issuance Set
Page 334 of 345

- Use lined bins or dumpsters to reduce leaking of liquid waste.
- Provide roofs, awnings, or attached lids on all trash containers to minimize direct precipitation and prevent rainfall from entering containers.
- Pave trash storage areas with an impervious surface to mitigate spills.
- Do not locate storm drains in immediate vicinity of the trash storage area.
- Post signs on all dumpsters informing users that hazardous materials are not to be disposed of therein.

Redeveloping Existing Installations

Various jurisdictional stormwater management and mitigation plans (SUSMP, WQMP, etc.) define "redevelopment" in terms of amounts of additional impervious area, increases in gross floor area and/or exterior construction, and land disturbing activities with structural or impervious surfaces. The definition of " redevelopment" must be consulted to determine whether or not the requirements for new development apply to areas intended for redevelopment. If the definition applies, the steps outlined under "designing new installations" above should be followed.

Additional Information

Maintenance Considerations

The integrity of structural elements that are subject to damage (i.e., screens, covers, and signs) must be maintained by the owner/operator. Maintenance agreements between the local agency and the owner/operator may be required. Some agencies will require maintenance deed restrictions to be recorded of the property title. If required by the local agency, maintenance agreements or deed restrictions must be executed by the owner/operator before improvement plans are approved.

Other Resources

A Manual for the Standard Urban Stormwater Mitigation Plan (SUSMP), Los Angeles County Department of Public Works, May 2002.

Model Standard Urban Storm Water Mitigation Plan (SUSMP) for San Diego County, Port of San Diego, and Cities in San Diego County, February 14, 2002.

Model Water Quality Management Plan (WQMP) for County of Orange, Orange County Flood Control District, and the Incorporated Cities of Orange County, Draft February 2003.

Ventura Countywide Technical Guidance Manual for Stormwater Quality Control Measures, July 2002.

APPENDIX H

CONSTRUCTION SITE INSPECTION REPORT

SD-10 Site Design & Landscape Planning

Designing New Installations

Begin the development of a plan for the landscape unit with attention to the following general principles:

- Formulate the plan on the basis of clearly articulated community goals. Carefully identify conflicts and choices between retaining and protecting desired resources and community growth.

- Map and assess land suitability for urban uses. Include the following landscape features in the assessment: wooded land, open unwooded land, steep slopes, erosion-prone soils, foundation suitability, soil suitability for waste disposal, aquifers, aquifer recharge areas, wetlands, floodplains, surface waters, agricultural lands, and various categories of urban land use. When appropriate, the assessment can highlight outstanding local or regional resources that the community determines should be protected (e.g., a scenic area, recreational area, threatened species habitat, farmland, fish run). Mapping and assessment should recognize not only these resources but also additional areas needed for their sustenance.

Project plan designs should conserve natural areas to the extent possible, maximize natural water storage and infiltration opportunities, and protect slopes and channels.

Conserve Natural Areas during Landscape Planning

If applicable, the following items are required and must be implemented in the site layout during the subdivision design and approval process, consistent with applicable General Plan and Local Area Plan policies:

- Cluster development on least-sensitive portions of a site while leaving the remaining land in a natural undisturbed condition.

- Limit clearing and grading of native vegetation at a site to the minimum amount needed to build lots, allow access, and provide fire protection.

- Maximize trees and other vegetation at each site by planting additional vegetation, clustering tree areas, and promoting the use of native and/or drought tolerant plants.

- Promote natural vegetation by using parking lot islands and other landscaped areas.

- Preserve riparian areas and wetlands.

Maximize Natural Water Storage and Infiltration Opportunities Within the Landscape Unit

- Promote the conservation of forest cover. Building on land that is already deforested affects basin hydrology to a lesser extent than converting forested land. Loss of forest cover reduces interception storage, detention in the organic forest floor layer, and water losses by evapotranspiration, resulting in large peak runoff increases and either their negative effects or the expense of countering them with structural solutions.

- Maintain natural storage reservoirs and drainage corridors, including depressions, areas of permeable soils, swales, and intermittent streams. Develop and implement policies and

regulations to discourage the clearing, filling, and channelization of these features. Utilize them in drainage networks in preference to pipes, culverts, and engineered ditches.

- Evaluating infiltration opportunities by referring to the stormwater management manual for the jurisdiction and pay particular attention to the selection criteria for avoiding groundwater contamination, poor soils, and hydrogeological conditions that cause these facilities to fail. If necessary, locate developments with large amounts of impervious surfaces or a potential to produce relatively contaminated runoff away from groundwater recharge areas.

Protection of Slopes and Channels during Landscape Design

- Convey runoff safely from the tops of slopes.
- Avoid disturbing steep or unstable slopes.
- Avoid disturbing natural channels.
- Stabilize disturbed slopes as quickly as possible.
- Vegetate slopes with native or drought tolerant vegetation.
- Control and treat flows in landscaping and/or other controls prior to reaching existing natural drainage systems.
- Stabilize temporary and permanent channel crossings as quickly as possible, and ensure that increases in run-off velocity and frequency caused by the project do not erode the channel.
- Install energy dissipaters, such as riprap, at the outlets of new storm drains, culverts, conduits, or channels that enter unlined channels in accordance with applicable specifications to minimize erosion. Energy dissipaters shall be installed in such a way as to minimize impacts to receiving waters.
- Line on-site conveyance channels where appropriate, to reduce erosion caused by increased flow velocity due to increases in tributary impervious area. The first choice for linings should be grass or some other vegetative surface, since these materials not only reduce runoff velocities, but also provide water quality benefits from filtration and infiltration. If velocities in the channel are high enough to erode grass or other vegetative linings, riprap, concrete, soil cement, or geo-grid stabilization are other alternatives.
- Consider other design principles that are comparable and equally effective.

Redeveloping Existing Installations

Various jurisdictional stormwater management and mitigation plans (SUSMP, WQMP, etc.) define "redevelopment" in terms of amounts of additional impervious area, increases in gross floor area and/or exterior construction, and land disturbing activities with structural or impervious surfaces. The definition of " redevelopment" must be consulted to determine whether or not the requirements for new development apply to areas intended for redevelopment. If the definition applies, the steps outlined under "designing new installations" above should be followed.

SD-10 Site Design & Landscape Planning

Redevelopment may present significant opportunity to add features which had not previously been implemented. Examples include incorporation of depressions, areas of permeable soils, and swales in newly redeveloped areas. While some site constraints may exist due to the status of already existing infrastructure, opportunities should not be missed to maximize infiltration, slow runoff, reduce impervious areas, disconnect directly connected impervious areas.

Other Resources

A Manual for the Standard Urban Stormwater Mitigation Plan (SUSMP), Los Angeles County Department of Public Works, May 2002.

Stormwater Management Manual for Western Washington, Washington State Department of Ecology, August 2001.

Model Standard Urban Storm Water Mitigation Plan (SUSMP) for San Diego County, Port of San Diego, and Cities in San Diego County, February 14, 2002.

Model Water Quality Management Plan (WQMP) for County of Orange, Orange County Flood Control District, and the Incorporated Cities of Orange County, Draft February 2003.

Ventura Countywide Technical Guidance Manual for Stormwater Quality Control Measures, July 2002.

Risk Level 1

Visual Inspection Field Log Sheet

Date and Time of Inspection:				Report Date:		
Inspection Type:	☐ Weekly	☐ Before predicted rain	☐ During rain event	☐ Following qualifying rain event	☐ Contained stormwater release	☐ Quarterly Non-stormwater

Site Information

Construction Site Name:	
Construction stage and completed activities:	Approximate area of exposed site:

Weather and Observations

Date Rain Predicted to Occur:		Predicted % chance of rain:	
Estimate storm beginning: _____ (date and time)	Estimate storm duration:_____ (hours)	Estimate time since last storm: _____ (days or hours)	Rain gauge reading: _____ (inches)

Observations: If yes identify location		
Odors Yes ☐	No ☐	
Floating material	Yes ☐	No ☐
Suspended Material	Yes ☐	No ☐
Sheen Yes ☐	No ☐	
Discolorations	Yes ☐	No ☐
Turbidity	Yes ☐	No ☐

Site Inspections

Outfalls or BMPs Evaluated	Deficiencies Noted

(add additional sheets or attached detailed BMP Inspection Checklists)			
Photos Taken:	Yes ☐	No ☐	Photo Reference IDs:
Corrective Actions Identified (note if SWPPP/REAP change is needed)			
Inspector Information			
Inspector Name:		Inspector Title:	
Signature:			Date:

APPENDIX J

TRAINING REPORT FORMS

EMPLOYEE TRAINING FORM

Date of session:

Trainer	
Print Name	Signature

Topics covered:

Attendee Name	Attendee Signature

APPENDIX K

RESPONSIBLE PARTIES

List to be inserted here

APPENDIX L

CONTRACTOR'S AND SUBCONTRATORS

List to be inserted here